# CMV.
Variable Displacement Motor.
Bent Axis Design.

Linde Hydraulics

| PRODUCT | |
|---|---|
| |  |
| Pressure Level | ● **High Pressure Hydraulics**<br>○ Medium Pressure Hydraulics |
| Application | ● **Open Circuit**<br>● **Closed Circuit** |
| | |

| DOCUMENT | |
|---|---|
| Specification | ○ Inquiry Form (Modelcode & Availability)<br>● **Datasheet** |
| Operation | ○ Basic Instructions<br>○ Additional Instructions |
| Assembly | ○ Basic Instructions<br>○ Additional Instructions |
| Release | **19/04/2023** Download the latest version |

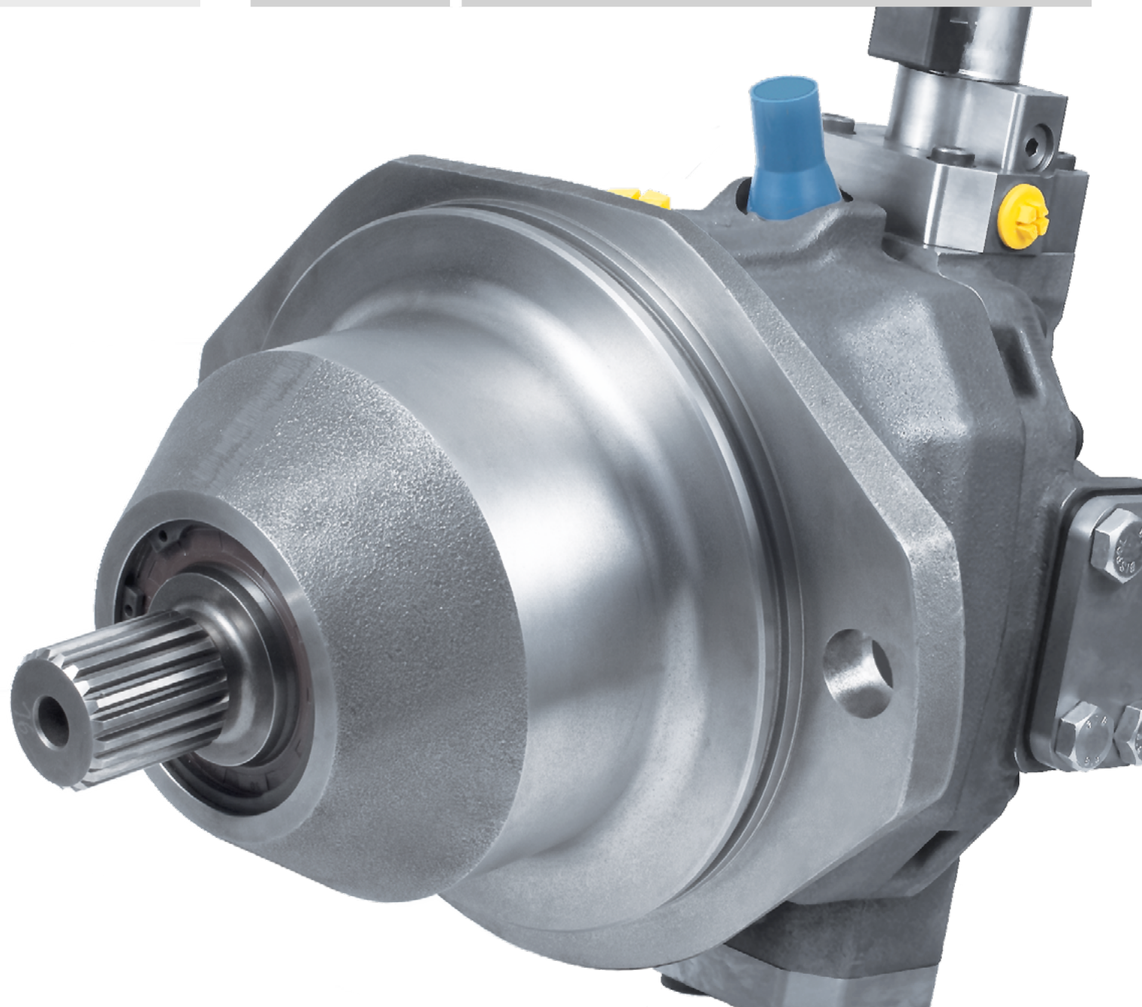

OVERVIEW
Key Facts
CONFIGURATION
Modelcode & Availability
TECHNICAL SPECIFICATION
General Technical Data
Operating Parameters
Controls
Sensors
Electric Interfaces
Connectors
Mechanical Interfaces
Flanges
Shafts
Hydraulical Interfaces
Work Ports
Auxiliary Ports
Functions/Options

# Overview | **Key Facts**

In the following you will find the design characteristics and related advantages of the CMV. The components mentioned here are referred to repeatedly in the following sections of this datasheet.

With the next generation of the bent axis motors, Linde Hydraulics expands its customer oriented portfolio of high-quality components for hydraulic systems. Due to their standardized interfaces, e.g. the plug-in flange according to ISO, the CMV and CMF fit a high variety of applications, without the need of adaptors. The motors enable a more cost effective operation of the respective applications thanks to low windage losses and lighter weight.

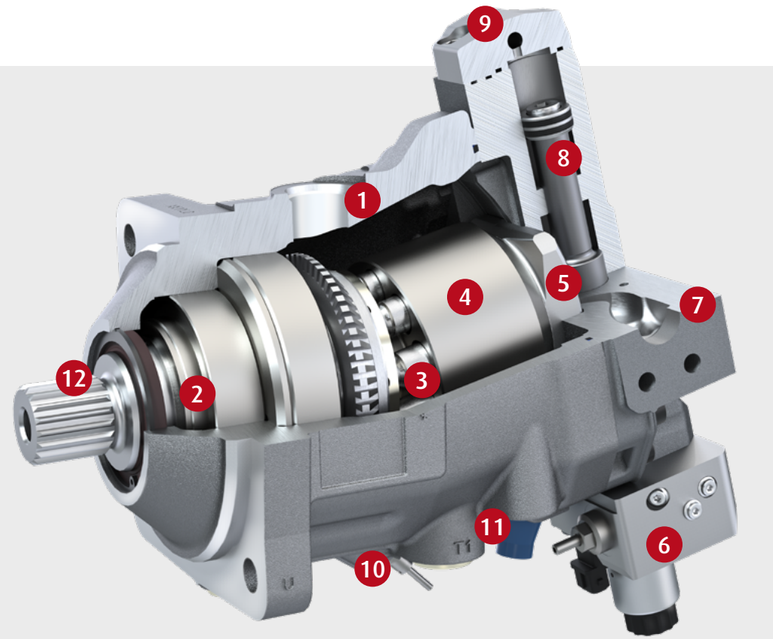


60 · · · · · · 85 · · · · · · 115 · · · · · · 140 · · · · · · 170 · · · · · · 215

Range [cc/rev]

| | | | | |
|---|---|---|---|---|
| 1 | | Robust design bent axis motor with high power density | | Suitable for a wide range of applications |
| 2 | | Drive shaft assembly | | High speed capability |
| 3 | | Pistons | | High flexibility |
| 4 | | Rotating group with variable displacement | | High starting torque |
| 5 | | Port plate | | High functional reliability - even under adverse operating conditions |
| 6 | | Modular concept of various displacement and/or pressure controls (e.g. pressure side selection) | | Precise control & low hysteresis |
| 7 | | Optimized flow concept | | Prevention of housing pressure peaks and vibrations |
| 8 | | Control piston | | Sensing of speed and direction of rotation |
| 9 | | Asymmetrically damped changeover switch | | Easy handling |
| 10 | | Sensor | | Easy replacement without the need of application |
| 11 | | Thread for mounting of lifting devices | | |
| 12 | | Standardized interfaces | | |

OVERVIEW
Key Facts
CONFIGURATION
Modelcode & Availability
TECHNICAL SPECIFICATION
General Technical Data
Operating Parameters
Controls
Sensors
Electric Interfaces
Connectors
Mechanical Interfaces
Flanges
Shafts
Hydraulical Interfaces
Work Ports
Auxiliary Ports
Functions/Options

# Configuration | Modelcode & Availability | **Type**

In the following you will find the Modelcode structure for inquiries in context of the [Configuration]. All features of the CMV are listed including brief specification. Please consider the availability and compatibility of the individual items regarding the relevant nominal size. In context of an order or inquiry consider these items as a coherent model code. It serves for further processing. For a more in-depth look at the technical specifications, please refer to the relevant section under [Technical Specification].

**Please note!**

This should be understood as a **model code example**. The **inquiry form** with the valid model code and current availabilities can be found on:

www.LHY.com

**Modelcode for orders/inquiries**

| | 01. | | 02. | | 03. | | 04. | | 05. | | 06. | | 07. | | 08. | | 09. | | 10. | | 11. | |
|---|---|---|---|---|---|---|---|---|---|---|---|---|---|---|---|---|---|---|---|---|---|---|
| | | – | | – | BASIC SPEC. | – | MOTOR CONTROL | | | – | ELECTRIC INTERFACE | | | – | MECHANICAL INTERFACE | | | – | HYDRAULIC INTERFACE | | | – |
| | A7 | | CMV | | | | | | | | | | | | | | | | | | M | |

| | 12. | | 13. | | 14. | | 15. | | 16. | | 17. | | 18. | | 19. | | 20. | | 21. |
|---|---|---|---|---|---|---|---|---|---|---|---|---|---|---|---|---|---|---|---|
| | VALV. FUNC. SET. | – | SENSORS | – | SEALS | – | STANDARD | – | COATING | – | DISPLACEMENT | | | – | | – | PRESS. OVERR. | – | DAMPING |
| | | | | | V | | | | | | | | | | | | | | |

Modelcode items describing a configuration element each

| Signalization | ● | ○ |
|---|---|---|
| Availability from | Now | Upon request |

| Signalization | ■ |
|---|---|
| Preference | Preferred option |

OVERVIEW
Key Facts
CONFIGURATION
Modelcode & Availability
TECHNICAL SPECIFICATION
General Technical Data
Operating Parameters
Controls
Sensors
Electric Interfaces
Connectors
Mechanical Interfaces
Flanges
Shafts
Hydraulical Interfaces
Work Ports
Auxiliary Ports
Functions/Options

# Configuration | Modelcode & Availability | **Type**

In the following you will find the Modelcode structure for inquiries in context of the [Configuration]. All features of the CMV are listed including brief specification. Please consider the availability and compatibility of the individual items regarding the relevant nominal size. In context of an order or inquiry consider these items as a coherent model code. It serves for further processing. For a more in-depth look at the technical specifications, please refer to the relevant section under [Technical Specification].

| Item | Feature | | | | | | | | | | | | |
|---|---|---|---|---|---|---|---|---|---|---|---|---|---|
| 1. | Type | | | | | | | | | | | | |
| | **Characteristic** | | | | | | | | | | | | |
| | Type | | | | | | | | | | | | |
| **CMV** | CMV | | | Bent Axis Design<br>Variable Displacement Motor | | | | | | | | | |

**Please note!**

This should be understood as a **model code example**. The **inquiry form** with the valid model code and current availabilities can be found on:

www.LHY.com

| 1. | CM |
|---|---|
| MODELCODE ITEM | Type |

| Signalization | ● | ○ |
|---|---|---|
| **Availability from** | Now | Upon request |

| Signalization | |
|---|---|
| **Preference** | Preferred option |

OVERVIEW
Key Facts
CONFIGURATION
Modelcode & Availability
TECHNICAL SPECIFICATION
General Technical Data
Operating Parameters
Controls
Sensors
Electric Interfaces
Connectors
Mechanical Interfaces
Flanges
Shafts
Hydraulical Interfaces
Work Ports
Auxiliary Ports
Functions/Options

# Configuration | Modelcode & Availability | **Model Code Release**

In the following you will find the Modelcode structure for inquiries in context of the [Configuration]. All features of the CMV are listed including brief specification. Please consider the availability and compatibility of the individual items regarding the relevant nominal size. In context of an order or inquiry consider these items as a coherent model code. It serves for further processing. For a more in-depth look at the technical specifications, please refer to the relevant section under [Technical Specification].

| Item | Feature |
|---|---|
| 2. | Model code release |
| | **Characteristic** |
| | Release date |
| **A5** | March 2023 |

2. MODELCODE ITEM

A7 Model Co

Please note!

This should be understood as a **model code example**. The **inquiry form** with the valid model code and current availabilities can be found on:

www.LHY.com

| Signalization | ● | ○ |
|---|---|---|
| **Availability from** | Now | Upon request |

| Signalization | |
|---|---|
| **Preference** | Preferred option |

OVERVIEW
Key Facts
CONFIGURATION
Modelcode & Availability
TECHNICAL SPECIFICATION
General Technical Data
Operating Parameters
Controls
Sensors
Electric Interfaces
Connectors
Mechanical Interfaces
Flanges
Shafts
Hydraulical Interfaces
Work Ports
Auxiliary Ports
Functions/Options

# Configuration | Modelcode & Availability | **Nominal Size**

In the following you will find the Modelcode structure for inquiries in context of the [Configuration]. All features of the CMV are listed including brief specification. Please consider the availability and compatibility of the individual items regarding the relevant nominal size. In context of an order or inquiry consider these items as a coherent model code. It serves for further processing. For a more in-depth look at the technical specifications, please refer to the relevant section under [Technical Specification].

**Please note!**

This should be understood as a **model code example**. The **inquiry form** with the valid model code and current availabilities can be found on:

www.LHY.com

| Item | Feature | | | | | | | | | | |
|---|---|---|---|---|---|---|---|---|---|---|---|
| 3. | Nominal size | | | | | | | | | | |
| | **Characteristic** | | | | | | **Nominal size** | | | | **Spec.** |
| | Nominal size | Maximum displacement range [cc/rev] | | | | | 060 | 085 | 115 | 140 | 170 | 215 | |
| **060** | 60 | 62 | | | | | ○ | | | | | | |
| **085** | 85 | 87.7 | | | | | | ● | | | | | |
| **115** | 115 | 115.3 | | | | | | | ● | | | | |
| **140** | 140 | 144.1 | | | | | | | | ● | | | |
| **170** | 170 | 170 | | | | | | | | | ● | | |
| **215** | 215 | 217.9 | | | | | | | | | | ● | |

| **Signalization** | ● | ○ |
|---|---|---|
| **Availability from** | Now | Upon request |

| **Signalization** | |
|---|---|
| **Preference** | Preferred option |

# Configuration | Modelcode & Availability | **Displacement Controlle**

In the following you will find the Modelcode structure for inquiries in context of the [Configuration]. All features of the CMV are listed including brief specification. Please consider the availability and compatibility of the individual items regarding the relevant nominal size. In context of an order or inquiry consider these items as a coherent model code. It serves for further processing. For a more in-depth look at the technical specifications, please refer to the relevant section under [Technical Specification].

**Please note!**

This should be understood as a **model code example**. The **inquiry form** with the valid model code and current availabilities can be found on:

**www.LHY.com**

**4.** MODELCODE ITEM — **Displacen**

| Item | Feature | | | | | | | | | | | | | |
|---|---|---|---|---|---|---|---|---|---|---|---|---|---|---|
| 4. | Displacement controller | | | | | | | | | | | | | |
| | **Characteristic** | | | | | | | | | | | | **Nominal size** | | | | | | **Spec.** |
| | Control | Default position | Characteristic (schematically shown) | Max. controlled | | 060 | 085 | 115 | 140 | 170 | 215 | | | | | | | | |
| **00** | | Vgmax / Vgmin | ○ | Vgmax / Vgmin | No displacement controller | ○ | ● | ● | ● | ● | ● | | | | | | | | |
| **E2** | Electric | Vgmax / Vgmin | ↓ | Vgmax / Vgmin | 2-position (negative control, minimum Vgmin=0) | ○ | ○ | ○ | ○ | ○ | ○ | | | | | | | | |
| **E4** | Electric | Vgmax / Vgmin | ↓ | Vgmax / Vgmin | Proportional (ΔI = 35 to 80 % of IG resolution, negative control, minimum Vgmin = 0) | ○ | ● | ● | ● | ● | ● | | | | | | | | |
| **E5** | Electric | Vgmax / Vgmin | ↑ | Vgmax / Vgmin | 2-position (positive control, minimum Vgmin = 0) | ○ | ○ | ○ | ○ | ○ | ○ | | | | | | | | |
| **E6** | Electric | Vgmax / Vgmin | ↑ | Vgmax / Vgmin | Proportional (ΔI = 35 to 80 % of IG resolution, positive control, minimum Vgmin = 0) | ○ | ● | ● | ● | ● | ● | | | | | | | | |

| Item | Feature | | | | | | | | | | | | | |
|---|---|---|---|---|---|---|---|---|---|---|---|---|---|---|
| | | | | | | | | | | | | | | |
| | **Characteristic** | | | | | | | | | | | | **Nominal size** | | | | | | **Spec.** |
| | Control | Default position | Characteristic (schematically shown) | Max. controlled | | 060 | 085 | 115 | 140 | 170 | 215 | | | | | | | | |
| **H2** | Hydraulic | Vgmax / Vgmin | ↓ | Vgmax / Vgmin | 2-position (reference pressure = case pressure, negative control, minimum Vgmin = 0) | ○ | ○ | ○ | ○ | ○ | ○ | | | | | | | | |
| **H4** | Hydraulic | Vgmax / Vgmin | ↓ | Vgmax / Vgmin | Proportional (ΔpSt = 10 bar resolution, reference pressure = case pressure, negative control, minimum Vgmin = 0 | ○ | ● | ● | ● | ● | ● | | | | | | | | |
| **H5** | Hydraulic | Vgmax / Vgmin | ↑ | Vgmax / Vgmin | 2-position (reference pressure = case pressure, positive control, minimum Vgmin = 0) | ○ | ○ | ○ | ○ | ○ | ○ | | | | | | | | |
| **H6** | Hydraulic | Vgmax / Vgmin | ↑ | Vgmax / Vgmin | Proportional (ΔpSt = 10 bar resolution, reference pressure = case pressure, positive control, minimum Vgmin = 0 | ○ | ● | ● | ● | ● | ● | | | | | | | | |

| **Signalization** | ● | ○ |
|---|---|---|
| **Availability from** | Now | Upon request |

| **Signalization** | ■ |
|---|---|
| **Preference** | Preferred option |

# Configuration | Modelcode & Availability | **Pressure Controller and/or Override Signal**

In the following you will find the Modelcode structure for inquiries in context of the [Configuration]. All features of the CMV are listed including brief specification. Please consider the availability and compatibility of the individual items regarding the relevant nominal size. In context of an order or inquiry consider these items as a coherent model code. It serves for further processing. For a more in-depth look at the technical specifications, please refer to the relevant section under [Technical Specification].

**5.** MODELCODE ITEM — Pressure

**Please note!**

This should be understood as a **model code example**. The **inquiry form** with the valid model code and current availabilities can be found on:

www.LHY.com

| Item | Feature | | | | | | | | | | | | | | | | | | | | | | |
|---|---|---|---|---|---|---|---|---|---|---|---|---|---|---|---|---|---|---|---|---|---|---|---|
| 5. | Pressure controller and/or override signal | | | | | | | | | | | | | | | | | | | | | | |
| | **Characteristic** | | | | | | | | | | | | | | | | | | | | | **Nominal size** | | | | | | **Spec.** |
| | Default position | Characteristic (schematically shown) | Max. controlled | | | | | | | | | | | | | | | | | | | 060 | 085 | 115 | 140 | 170 | 215 | |
| **00** | | | | No pressure controller, no override signal | | | | | | | | | | | | | | | | | | ○ | ● | ● | ● | ● | ● | |
| | | | | Compatibility with displacement controller | | | | | | | | | | | | | | | | | | | | | | | | |
| | | | | 00 | E2 | E4 | E5 | E6 | HC | H2 | H4 | H5 | H6 | | | | | | | | | | | | | | | |
| | | | | | | ✓ | | ✓ | | | ✓ | | ✓ | | | | | | | | | | | | | | | |
| **P0** | Vgmax | | Vgmax | Pressure controller (15 bar pressure gain), shuttle valve = highest work port pressure | | | | | | | | | | | | | | | | | | ○ | ● | ● | ● | ● | ● | |
| | Vgmin | | Vgmin | Compatibility with displacement controller | | | | | | | | | | | | | | | | | | | | | | | | |
| | | | | 00 | E2 | E4 | E5 | E6 | HC | H2 | H4 | H5 | H6 | | | | | | | | | | | | | | | |
| | | | | ✓ | | ✓ | | | | | ✓ | | | | | | | | | | | | | | | | | |
| **P1** | Vgmax | | Vgmax | Pressure controller (100 bar pressure gain), shuttle valve = highest work port pressure | | | | | | | | | | | | | | | | | | ○ | ● | ● | ● | ● | ● | |
| | Vgmin | | Vgmin | Compatibility with displacement controller | | | | | | | | | | | | | | | | | | | | | | | | |
| | | | | 00 | E2 | E4 | E5 | E6 | HC | H2 | H4 | H5 | H6 | | | | | | | | | | | | | | | |
| | | | | ✓ | | | | | | | | | | | | | | | | | | | | | | | | |
| **P3** | Vgmax | | Vgmax | Pressure controller (15 bar pressure gain), shuttle valve = highest work port pressure, remote signal for reduction of pressure controller setting | | | | | | | | | | | | | | | | | | ○ | ● | ● | ● | ● | ● | |
| | Vgmin | | Vgmin | Compatibility with displacement controller | | | | | | | | | | | | | | | | | | | | | | | | |
| | | | | 00 | E2 | E4 | E5 | E6 | HC | H2 | H4 | H5 | H6 | | | | | | | | | | | | | | | |
| | | | | ✓ | | | | | | | | | | | | | | | | | | | | | | | | |

| Item | Feature | | | | | | | | | | | | | | | | | | | | | | |
|---|---|---|---|---|---|---|---|---|---|---|---|---|---|---|---|---|---|---|---|---|---|---|---|
| | | | | | | | | | | | | | | | | | | | | | | | |
| | **Characteristic** | | | | | | | | | | | | | | | | | | | | | **Nominal size** | | | | | | **Spec.** |
| | Default position | Characteristic (schematically shown) | Max. controlled | | | | | | | | | | | | | | | | | | | 060 | 085 | 115 | 140 | 170 | 215 | |
| **P4** | Vgmax | | Vgmax | Pressure controller (15 bar pressure gain), electric controlled pressure side selection | | | | | | | | | | | | | | | | | | ○ | ● | ● | ● | ● | ● | |
| | Vgmin | | Vgmin | Compatibility with displacement controller | | | | | | | | | | | | | | | | | | | | | | | | |
| | | | | 00 | E2 | E4 | E5 | E6 | HC | H2 | H4 | H5 | H6 | | | | | | | | | | | | | | | |
| | | | | | | ✓ | | | | | ✓ | | | | | | | | | | | | | | | | | |
| **P6** | Vgmax | | Vgmax | Pressure controller (15 bar pressure gain), electric controlled pressure side selection, electric VGmax switch | | | | | | | | | | | | | | | | | | ○ | ○ | ○ | ○ | ○ | ○ | |
| | Vgmin | | Vgmin | Compatibility with displacement controller | | | | | | | | | | | | | | | | | | | | | | | | |
| | | | | 00 | E2 | E4 | E5 | E6 | HC | H2 | H4 | H5 | H6 | | | | | | | | | | | | | | | |
| | | | | | | | | | ✓ | | ✓ | | | | | | | | | | | | | | | | | |
| **P8** | Vgmax | | Vgmax | Pressure controller (100 bar pressure gain), shuttle valve = highest work port pressure, remote signal for reduction of pressure controller setting | | | | | | | | | | | | | | | | | | ○ | ● | ● | ● | ● | ● | |
| | Vgmin | | Vgmin | Compatibility with displacement controller | | | | | | | | | | | | | | | | | | | | | | | | |
| | | | | 00 | E2 | E4 | E5 | E6 | HC | H2 | H4 | H5 | H6 | | | | | | | | | | | | | | | |
| | | | | ✓ | | | | | | | | | | | | | | | | | | | | | | | | |

| **Signalization** | ● | ○ |
|---|---|---|
| **Availability from** | Now | Upon request |

| **Signalization** | |
|---|---|
| **Preference** | Preferred option |

# Configuration | Modelcode & Availability | **Electric Connectors for S… & Solenoids**

In the following you will find the Modelcode structure for inquiries in context of the [Configuration]. All features of the CMV are listed including brief specification. Please consider the availability and compatibility of the individual items regarding the relevant nominal size. In context of an order or inquiry consider these items as a coherent model code. It serves for further processing. For a more in-depth look at the technical specifications, please refer to the relevant section under [Technical Specification].

| Item | Feature | | | | | | | | | | | |
|---|---|---|---|---|---|---|---|---|---|---|---|---|
| 6. | Electric connectors for sensors & solenoids | | | | | | | | | | | |
| | **Characteristic** | | | | **Nominal size** | | | | | | | **Spec.** |
| | | | | | 060 | 085 | 115 | 140 | 170 | 215 | | |
| **0** | | | | Not applicable | ○ | ● | ● | ● | ● | ● | | |
| **D** | | | | Deutsch | ○ | ● | ● | ● | ● | ● | | |
| **A** | | | | AMP Junior Timer | ○ | ● | ● | ● | ● | ● | | |

| | | |
|---|---|---|
| **Signalization** | ● | ○ |
| **Availability from** | Now | Upon request |

| | |
|---|---|
| **Signalization** | |
| **Preference** | Preferred option |

**6.** MODELCODE ITEM — **Electric Co…**

**Please note!**

This should be understood as a **model code example**. The **inquiry form** with the valid model code and current availabilities can be found on:

**www.LHY.com**

OVERVIEW
Key Facts
CONFIGURATION
Modelcode & Availability
TECHNICAL SPECIFICATION
General Technical Data
Operating Parameters
Controls
Sensors
Electric Interfaces
Connectors
Mechanical Interfaces
Flanges
Shafts
Hydraulical Interfaces
Work Ports
Auxiliary Ports
Functions/Options

# Configuration | Modelcode & Availability | **Voltage for Solenoids**

In the following you will find the Modelcode structure for inquiries in context of the [Configuration]. All features of the CMV are listed including brief specification. Please consider the availability and compatibility of the individual items regarding the relevant nominal size. In context of an order or inquiry consider these items as a coherent model code. It serves for further processing. For a more in-depth look at the technical specifications, please refer to the relevant section under [Technical Specification].

**Please note!**

This should be understood as a **model code example**. The **inquiry form** with the valid model code and current availabilities can be found on:

www.LHY.com

| 7. | Voltage f |
|---|---|
| MODELCODE ITEM | |

| Item | Feature | | | | | | | | | | | | |
|---|---|---|---|---|---|---|---|---|---|---|---|---|---|
| 7. | Voltage for solenoids | | | | | | | | | | | | |
| | **Characteristic** | | | | **Nominal size** | | | | | | | | **Spec.** |
| | | | | | 060 | 085 | 115 | 140 | 170 | 215 | | | |
| **0** | | | | Not applicable | ○ | ● | ● | ● | ● | ● | | | |
| **1** | | | | 12 V | ○ | ● | ● | ● | ● | ● | | | |
| **2** | | | | 24 V | ○ | ● | ● | ● | ● | ● | | | |

| **Signalization** | ● | ○ |
|---|---|---|
| **Availability from** | Now | Upon request |

| **Signalization** | |
|---|---|
| **Preference** | Preferred option |

# Configuration | Modelcode & Availability | **Mounting Flange**

In the following you will find the Modelcode structure for inquiries in context of the [Configuration]. All features of the CMV are listed including brief specification. Please consider the availability and compatibility of the individual items regarding the relevant nominal size. In context of an order or inquiry consider these items as a coherent model code. It serves for further processing. For a more in-depth look at the technical specifications, please refer to the relevant section under [Technical Specification].

**Please note!**

This should be understood as a **model code example**. The **inquiry form** with the valid model code and current availabilities can be found on:

**www.LHY.com**

| 8. | Mounting |
|---|---|
| MODELCODE ITEM | |

| Item | Feature | | | | | | | | | | | | |
|---|---|---|---|---|---|---|---|---|---|---|---|---|---|
| 8. | Mounting flange | | | | | | | | | | | | |
| | Characteristic | | | | | | Nominal size | | | | | | Spec. |
| | Standard | Size [mm]-Number of bolts | | | | | 060 | 085 | 115 | 140 | 170 | 215 | |
| C2 | ISO 3019-1 / SAE J744 | 127-2 | | | SAE C | | | ● | | | | | |
| C4 | | 127-4 | | | SAE C | | ○ | | | | | | |
| D4 | | 152-4 | | | SAE D | | | ● | ● | ● | | | |
| E4 | | 165-4 | | | SAE E | | | | | | | ● | |
| M4 | ISO 3019-2 metric | 125-4 | | | | | ○ | | | | | | |
| N4 | | 140-4 | | | | | | ● | | | | | |
| P4 | | 160-4 | | | | | | | ● | | | | |
| R4 | | 180-4 | | | | | | | | ● | ● | | |

| Item | Feature | | | | | | | | | | | | |
|---|---|---|---|---|---|---|---|---|---|---|---|---|---|
| | Characteristic | | | | | | Nominal size | | | | | | Spec. |
| | Standard | Size [mm]-Number of bolts | | | | | 060 | 085 | 115 | 140 | 170 | 215 | |
| S4 | ISO 3019-2 metric | 200-4 | | | | | | | | | | ● | |
| P2 | Plug-in, similar to ISO 3019-2 | 160-2 | | | Plug-in | | ○ | | | | | | |
| Y2 | | 190-2 | | | Plug-in | | | ● | | | | | |
| S2 | | 200-2 | | | Plug-in | | | | ● | ● | ● | | |
| Z4 | | 260-4 | | | Plug-in | | | | | | | ● | |

| Signalization | ● | ○ |
|---|---|---|
| Availability from | Now | Upon request |

| Signalization | |
|---|---|
| Preference | Preferred option |

# Configuration | Modelcode & Availability | **Drive Shaft / Compagnion flange**

In the following you will find the Modelcode structure for inquiries in context of the [Configuration]. All features of the CMV are listed including brief specification. Please consider the availability and compatibility of the individual items regarding the relevant nominal size. In context of an order or inquiry consider these items as a coherent model code. It serves for further processing. For a more in-depth look at the technical specifications, please refer to the relevant section under [Technical Specification].

**Please note!**

This should be understood as a **model code example**. The **inquiry form** with the valid model code and current availabilities can be found on:

**www.LHY.com**

| 9. | | Drive Sha |
|---|---|---|
| MODELCODE ITEM | | |

| Item | Feature | | | | | | | | | | | | | |
|---|---|---|---|---|---|---|---|---|---|---|---|---|---|---|
| 9. | Drive shaft / compagnion flange | | | | | | | | | | | | | |
| | Characteristic | | | | | | Nominal size | | | | | | | Spec. |
| | Standard | Number of teeth | Spline pitch/ module | Identification code | | | 060 | 085 | 115 | 140 | 170 | 215 | | |
| S7 | ISO 3019-1/ SAE J744 | 14 | 12/24 | 32-4 | | | ○ | | | | | | | |
| S8 | | 21 | 16/32 | 35-4 | | | | ● | | | | | | |
| S9 | | 17 | 12/24 | 38-4 | | | | ● | ■ | | | | | |
| V6 | | 23 | 16/32 | 38-4 | | | | ● | ● | | | | | |
| V7 | | 27 | 16/32 | 44-4 | | | | | | ● | ■ | | | |
| T1 | | 13 | 8/16 | 44-4 | | | | | | ● | ● | ● | | |
| T2 | | 15 | 8/16 | 50-4 | | | | | | | | ● | ● | |
| D3 | DIN5480 | 14 | 2 | W30 | | | ○ | | | | | | | |
| D4 | | 16 | 2 | W35 | | | ○ | ● | | | | | | |
| D5 | | 18 | 2 | W40 | | | | | ● | ● | | | | |
| D6 | | 21 | 2 | W45 | | | | | | ● | ● | ● | | |
| D7 | | 24 | 2 | W50 | | | | | | | | ● | ● | |
| F4 | SAE J1946 | | | | Companion flange Type A - 120x8xM10 | | | | ○ | ○ | ○ | ○ | ○ | ○ |

| Signalization | ● | ○ |
|---|---|---|
| Availability from | Now | Upon request |

| Signalization | ■ |
|---|---|
| Preference | Preferred option |

# Configuration | Modelcode & Availability | **Port Plate Housing**

In the following you will find the Modelcode structure for inquiries in context of the [Configuration]. All features of the CMV are listed including brief specification. Please consider the availability and compatibility of the individual items regarding the relevant nominal size. In context of an order or inquiry consider these items as a coherent model code. It serves for further processing. For a more in-depth look at the technical specifications, please refer to the relevant section under [Technical Specification].

**Please note!**

This should be understood as a **model code example**. The **inquiry form** with the valid model code and current availabilities can be found on:

**www.LHY.com**

**10.** **MODELCODE ITEM** **Port Plate**

| Item | Feature | | | | | | | | | | | | | | | | | | |
|---|---|---|---|---|---|---|---|---|---|---|---|---|---|---|---|---|---|---|---|
| 10. | Port Plate Housing | | | | | | | | | | | | | | | | | | |
| | **Characteristic** | | | | | | | | | | | | | | | | **Nominal size** | | **Spec.** |
| | | | Open & closed circuit operation | Closed circuit operation | Open circuit operation | | | | | | | | | | | | | | |
| | | | Without additional functions | Flushing valve | Counter balance valve | Cross over relief valve | Anti-cavitation valve | Interface for external counter balance valve | 060 | 085 | 115 | 140 | 170 | 215 | | | | | |
| **A0** | Axial twin ports (facing to rear) | Work port orientation | ✓ | | | | | | ○ | ● | ● | ● | ● | ● | | | | | |
| **A1** | | | | ✓ | | | | | ○ | ● | ● | ● | ● | ● | | | | | |
| **A3** | | | | | | ✓ | | | | | | ○ | ○ | | | | | | |
| **A4** | | | | | | | ✓ | | | | | ● | ● | | | | | | |
| **A5** | | | | | | ✓ | | ✓ | | | | ○ | ○ | | | | | | |
| **S0** | Side ports (facing to the outside, left and right) | | ✓ | | | | | | ○ | ● | ● | ● | ● | ● | | | | | |
| **S1** | | | | ✓ | | | | | ○ | ● | ● | ● | ● | ● | | | | | |

| Item | Feature | | | | | | | | | | | | | | | | | | |
|---|---|---|---|---|---|---|---|---|---|---|---|---|---|---|---|---|---|---|---|
| 10. | Port Plate Housing | | | | | | | | | | | | | | | | | | |
| | **Characteristic** | | | | | | | | | | | | | | | | **Nominal size** | | **Spec.** |
| | | | Open & closed circuit operation | Closed circuit operation | Open circuit operation | | | | | | | | | | | | | | |
| | | | Without additional functions | Flushing valve | Counter balance valve | Cross over relief valve | Anti-cavitation valve | Interface for external counter balance valve | 060 | 085 | 115 | 140 | 170 | 215 | | | | | |
| **R2** | Radial twin ports | Work port orientation | | | ✓ | | | | | | | | ○ | ○ | | | | | |

| **Signalization** | ● | ○ |
|---|---|---|
| **Availability from** | Now | Upon request |

| **Signalization** | ■ |
|---|---|
| **Preference** | Preferred option |

OVERVIEW
Key Facts
CONFIGURATION
Modelcode & Availability
TECHNICAL SPECIFICATION
General Technical Data
Operating Parameters
Controls
Sensors
Electric Interfaces
Connectors
Mechanical Interfaces
Flanges
Shafts
Hydraulical Interfaces
Work Ports
Auxiliary Ports
Functions/Options

# Configuration | Modelcode & Availability | **Auxiliary Ports**

In the following you will find the Modelcode structure for inquiries in context of the [Configuration]. All features of the CMV are listed including brief specification. Please consider the availability and compatibility of the individual items regarding the relevant nominal size. In context of an order or inquiry consider these items as a coherent model code. It serves for further processing. For a more in-depth look at the technical specifications, please refer to the relevant section under [Technical Specification].

| Item | Feature | | | | | | | | |
|---|---|---|---|---|---|---|---|---|---|
| 11. | Auxiliary ports | | | | | | | | |
| | **Characteristic** | | | | **Nominal size** | | | | **Spec.** |
| | | | | | 060 | 085 | 115 | 140 | 170 | 215 | |
| **M** | | | | ISO metric, ISO 6149-1 | ○ | ● | ● | ● | ● | ● | |

| **Signalization** | ● | ○ |
|---|---|---|
| **Availability from** | Now | Upon request |

| **Signalization** | |
|---|---|
| **Preference** | Preferred option |

**11.** MODELCODE ITEM — **M** Auxiliary

**Please note!**

This should be understood as a **model code example**. The **inquiry form** with the valid model code and current availabilities can be found on:

www.LHY.com

OVERVIEW
Key Facts
CONFIGURATION
Modelcode & Availability
TECHNICAL SPECIFICATION
General Technical Data
Operating Parameters
Controls
Sensors
Electric Interfaces
Connectors
Mechanical Interfaces
Flanges
Shafts
Hydraulical Interfaces
Work Ports
Auxiliary Ports
Functions/Options

# Configuration | Modelcode & Availability | **Valve Function Settings**

In the following you will find the Modelcode structure for inquiries in context of the [Configuration]. All features of the CMV are listed including brief specification. Please consider the availability and compatibility of the individual items regarding the relevant nominal size. In context of an order or inquiry consider these items as a coherent model code. It serves for further processing. For a more in-depth look at the technical specifications, please refer to the relevant section under [Technical Specification].

**12.** MODELCODE ITEM — Valve fun

**Please note!**

This should be understood as a **model code example**. The **inquiry form** with the valid model code and current availabilities can be found on:

**www.LHY.com**

| Item | Feature | | | | | | | | | | | | | |
|---|---|---|---|---|---|---|---|---|---|---|---|---|---|---|
| 12. | Valve function settings (according to your choice at item 10. Port plate housing) | | | | | | | | | | | | | |
| | Characteristic | | | | | | | Nominal size | | | | | | Spec. |
| | | | | | | | | 060 | 085 | 115 | 140 | 170 | 215 | |
| | Operation | | Port plate function | Pressure [bar] | Flow [l/min] | | | | | | | | | |
| 0 | Open & closed circuit | | No additional function | - | - | | | ○ | ● | ● | ● | ● | ● | |
| | | | | | | | | | | | | | | |
| | | | | | | | | | | | | | | |
| P | | | Cross over relief valve | 400 | | | | | | | | ○ | ○ | |
| Q | | | | 380 | | | | | | | | ○ | ○ | |
| R | | | | 350 | | | | | | | | ○ | ○ | |
| S | | | | 300 | | | | | | | | ○ | ○ | |
| T | | | | 250 | | | | | | | | ○ | ○ | |

| Item | Feature | | | | | | | | | | | | | |
|---|---|---|---|---|---|---|---|---|---|---|---|---|---|---|
| 12. | Valve function settings (according to your [illegible] plate housing) | | | | | | | | | | | | | |
| | Characteristic | | | | | | | Nominal size | | | | | | Spec. |
| | | | | | | | | 060 | 085 | 115 | 140 | 170 | 215 | |
| | Operation | | Function | Pressure [bar] | Flow [l/min] | | | | | | | | | |
| B | Closed circuit | | Flushing | | 6 | | | ○ | ● | ● | ● | ● | ● | |
| D | | | | | 10 | | | ○ | ● | ● | ● | ● | ● | |
| F | | | | | 15 | | | ○ | ● | ● | ● | ● | ● | |
| H | | | | | 20 | | | ○ | ● | ● | ● | ● | ● | |
| J | | | | | 25 | | | | | | | | | |

| Signalization | ● | ○ |
|---|---|---|
| Availability from | Now | Upon request |

| Signalization | |
|---|---|
| Preference | Preferred option |

# Configuration | Modelcode & Availability | **Speed Sensor**

In the following you will find the Modelcode structure for inquiries in context of the [Configuration]. All features of the CMV are listed including brief specification. Please consider the availability and compatibility of the individual items regarding the relevant nominal size. In context of an order or inquiry consider these items as a coherent model code. It serves for further processing. For a more in-depth look at the technical specifications, please refer to the relevant section under [Technical Specification].

| Item | Feature | | | | | | | | | | | |
|---|---|---|---|---|---|---|---|---|---|---|---|---|
| 13. | Speed sensor | | | | | | | | | | | |
| | **Characteristic** | | | | | **Nominal size** | | | | | | **Spec.** |
| | Speed sensor | Prepared for speed sensor | Without Speed sensor | | | 060 | 085 | 115 | 140 | 170 | 215 | |
| **S** | ✓ | | | Speed sensor,<br>Function: speed and direction of rotation<br><br>Connector type: is to be defined at modelcode Item 6 (default: Deutsch) | | ○ | ● | ● | ● | ● | ● | |
| **V** | | ✓ | | Option allows the subsequent installation of speed sensors<br><br>(Housing already has a mounting for the sensor, the drive shaft is equipped with an incremental ring) | | ○ | ● | ● | ● | ● | ● | |
| **0** | | | ✓ | Option does not allow the subsequent installation of speed sensors<br><br>(Housing has no mounting for the sensor, the drive shaft is not equipped with an incremental ring) | | ○ | ○ | ○ | ○ | ○ | ○ | |

**13.** MODELCODE ITEM — Speed Se

**Please note!**

This should be understood as a **model code example**. The **inquiry form** with the valid model code and current availabilities can be found on:

www.LHY.com

| **Signalization** | ● | ○ |
|---|---|---|
| **Availability from** | Now | Upon request |

| **Signalization** | |
|---|---|
| **Preference** | Preferred option |

# Configuration | Modelcode & Availability | **Seal Material**

In the following you will find the Modelcode structure for inquiries in context of the [Configuration]. All features of the CMV are listed including brief specification. Please consider the availability and compatibility of the individual items regarding the relevant nominal size. In context of an order or inquiry consider these items as a coherent model code. It serves for further processing. For a more in-depth look at the technical specifications, please refer to the relevant section under [Technical Specification].

| Item | Feature | | | | | | | | | |
|---|---|---|---|---|---|---|---|---|---|---|
| 14. | Seal material | | | | | | | | | |
| | **Characteristic** | | | | **Nominal size** | | | | | **Spec.** |
| | | | | | 060 | 085 | 115 | 140 | 170 | 215 | |
| **V** | | | | FKM (Viton) | ○ | ● | ● | ● | ● | ● | |

| **Signalization** | ● | ○ |
|---|---|---|
| **Availability from** | Now | Upon request |

| **Signalization** | |
|---|---|
| **Preference** | Preferred option |

**14.** MODELCODE ITEM

**V** Seal Mate

**Please note!**

This should be understood as a **model code example**. The **inquiry form** with the valid model code and current availabilities can be found on:

www.LHY.com

OVERVIEW
Key Facts
CONFIGURATION
Modelcode & Availability
TECHNICAL SPECIFICATION
General Technical Data
Operating Parameters
Controls
Sensors
Electric Interfaces
Connectors
Mechanical Interfaces
Flanges
Shafts
Hydraulical Interfaces
Work Ports
Auxiliary Ports
Functions/Options

# Configuration | Modelcode & Availability | **Variant Configuration**

In the following you will find the Modelcode structure for inquiries in context of the [Configuration]. All features of the CMV are listed including brief specification. Please consider the availability and compatibility of the individual items regarding the relevant nominal size. In context of an order or inquiry consider these items as a coherent model code. It serves for further processing. For a more in-depth look at the technical specifications, please refer to the relevant section under [Technical Specification].

| Item | Feature | | | | | | | | | | |
|---|---|---|---|---|---|---|---|---|---|---|---|
| 15. | Variant configuration (may require further information) | | | | | | | | | | |
| | **Characteristic** | | | | | | | | | | |
| | | | | | | | | | | | |
| **0** | Standard execution | | | (Your desired configuration corresponds to the availabilities and combinations listed in this document.) | ○ | ● | ● | ● | ● | ● | |
| **P** | Special version | | | (Your desired configuration does not correspond to the availabilities shown in this document and/or does not correspond to the possible combinations shown.)<br><br>Please explain your desired configuration in more detail under “Your choice & inquiry!“ | ○ | ○ | ○ | ○ | ○ | ○ | |
| | | | | | | | | | | | |
| | | | | | | | | | | | |

| **Signalization** | ● | ○ |
|---|---|---|
| **Availability from** | Now | Upon request |

| **Signalization** | |
|---|---|
| **Preference** | Preferred option |

**15.** **MODELCODE ITEM**

**Variant Co**
**(may requ**

**Please note!**

This should be understood as a **model code example**. The **inquiry form** with the valid model code and current availabilities can be found on:

www.LHY.com

OVERVIEW
Key Facts
CONFIGURATION
Modelcode & Availability
TECHNICAL SPECIFICATION
General Technical Data
Operating Parameters
Controls
Sensors
Electric Interfaces
Connectors
Mechanical Interfaces
Flanges
Shafts
Hydraulical Interfaces
Work Ports
Auxiliary Ports
Functions/Options

# Configuration | Modelcode & Availability | **Corrosion Protection or P**

In the following you will find the Modelcode structure for inquiries in context of the [Configuration]. All features of the CMV are listed including brief specification. Please consider the availability and compatibility of the individual items regarding the relevant nominal size. In context of an order or inquiry consider these items as a coherent model code. It serves for further processing. For a more in-depth look at the technical specifications, please refer to the relevant section under [Technical Specification].

**16.** MODELCODE ITEM — Corrosion

**Please note!**

This should be understood as a **model code example**. The **inquiry form** with the valid model code and current availabilities can be found on:

www.LHY.com

| Item | Feature | | | | | | | | | | | |
|---|---|---|---|---|---|---|---|---|---|---|---|---|
| 16. | Corrosion protection or paint | | | | | | | | | | | |
| | **Characteristic** | | | | **Nominal size** | | | | | | | **Spec.** |
| | Corrosion protection | Primer | Paint | | 060 | 085 | 115 | 140 | 170 | 215 | | |
| **00** | Anticorit RPO-3002 | | | Corrosion protection, no primer or paint, 6 month active | ○ | ● | ● | ● | ● | ● | | |
| **P1** | | oxide red, RAL 3009 | | Primer | ○ | ● | ● | ● | ● | ● | | |
| **P6** | | traffic grey B RAL 7043 | | Primer (default primer) | ○ | ● | ● | ● | ● | ● | | |
| **V3** | | grey, RAL 7043 | jet black, RAL 9005 | 2-coat paint | ○ | ● | ● | ● | ● | ● | | |
| **V7** | | grey, RAL 7043 | slate grey, RAL 7015 | 2-coat paint | ○ | ● | ● | ● | ● | ● | | |

| **Signalization** | ● | ○ |
|---|---|---|
| **Availability from** | Now | Upon request |

| **Signalization** | ■ |
|---|---|
| **Preference** | Preferred option |

OVERVIEW
Key Facts
CONFIGURATION
Modelcode & Availability
TECHNICAL SPECIFICATION
General Technical Data
Operating Parameters
Controls
Sensors
Electric Interfaces
Connectors
Mechanical Interfaces
Flanges
Shafts
Hydraulical Interfaces
Work Ports
Auxiliary Ports
Functions/Options

# Configuration | Modelcode & Availability | **Vgmax**

In the following you will find the Modelcode structure for inquiries in context of the [Configuration]. All features of the CMV are listed including brief specification. Please consider the availability and compatibility of the individual items regarding the relevant nominal size. In context of an order or inquiry consider these items as a coherent model code. It serves for further processing. For a more in-depth look at the technical specifications, please refer to the relevant section under [Technical Specification].

| Item | Feature | | | | | | | | | | | | | |
|---|---|---|---|---|---|---|---|---|---|---|---|---|---|---|
| 17. | Vgmax | | | | | | | | | | | | | |
| | **Characteristic** | | | | | | **Nominal size** | | | | | | | **Spec.** |
| | Fixed setting | Individual setting | Comes with adjustment screw | Subsequent changes possible | Set value [cc/rev] | | 060 | 085 | 115 | 140 | 170 | 215 | | |
| **MAX** | ✓ | | | | 62 | | ○ | | | | | | | |
| | | | | | 87.7 | | | ● | | | | | | |
| | | | | | 115.3 | | | | ● | | | | | |
| | | | | | 144.1 | | | | | ● | | | | |
| | | | | | 170 | | | | | | ● | | | |
| | | | | | 217.9 | | | | | | | ● | | |
| **[VALUE]** | | ✓ | ✓ | ✓ | Individual value (numeric, 3 digits, only integer values) Minimum 70% of Vgmax expressed in cc/rev) | | ○ | ● | ● | ● | ● | ● | | |

**17.** MODELCODE ITEM — Vgmax

**Please note!**

This should be understood as a **model code example**. The **inquiry form** with the valid model code and current availabilities can be found on:

www.LHY.com

| **Signalization** | ● | ○ |
|---|---|---|
| **Availability from** | Now | Upon request |

| **Signalization** | |
|---|---|
| **Preference** | Preferred option |

OVERVIEW
Key Facts
CONFIGURATION
Modelcode & Availability
TECHNICAL SPECIFICATION
General Technical Data
Operating Parameters
Controls
Sensors
Electric Interfaces
Connectors
Mechanical Interfaces
Flanges
Shafts
Hydraulical Interfaces
Work Ports
Auxiliary Ports
Functions/Options

# Configuration | Modelcode & Availability | **Vgmin**

In the following you will find the Modelcode structure for inquiries in context of the [Configuration]. All features of the CMV are listed including brief specification. Please consider the availability and compatibility of the individual items regarding the relevant nominal size. In context of an order or inquiry consider these items as a coherent model code. It serves for further processing. For a more in-depth look at the technical specifications, please refer to the relevant section under [Technical Specification].

**Please note!**

This should be understood as a **model code example**. The **inquiry form** with the valid model code and current availabilities can be found on:

www.LHY.com

**18.** MODELCODE ITEM — Vgmin

| Item | Feature | | | | | | | | | | | | |
|---|---|---|---|---|---|---|---|---|---|---|---|---|---|
| 18. | Vgmin | | | | | | | | | | | | |
| | **Characteristic** | | | | | | **Nominal size** | | | | | | **Spec.** |
| | Fixed setting | Individual setting | Comes with adjustment screw | Subsequent changes possible | Set value [cc/rev] | | 060 | 085 | 115 | 140 | 170 | 215 | |
| **[VALUE]** | | ✓ | ✓ | ✓ | Range 0 to 70% of Vgmax[*1] expressed in cc/rev (numeric, 3 digits, only integer values) | | ○ | ● | ● | ● | ● | ● | |

| **Signalization** | ● | ○ |
|---|---|---|
| **Availability from** | Now | Upon request |

| **Signalization** | |
|---|---|
| **Preference** | Preferred option |

1 at values <25% of Vgmax, motor should not be operated in motor mode - always observe max speed limitations

OVERVIEW
Key Facts
CONFIGURATION
Modelcode & Availability
TECHNICAL SPECIFICATION
General Technical Data
Operating Parameters
Controls
Sensors
Electric Interfaces
Connectors
Mechanical Interfaces
Flanges
Shafts
Hydraulical Interfaces
Work Ports
Auxiliary Ports
Functions/Options

# Configuration | Modelcode & Availability | **Begin of Displacement C**

In the following you will find the Modelcode structure for inquiries in context of the [Configuration]. All features of the CMV are listed including brief specification. Please consider the availability and compatibility of the individual items regarding the relevant nominal size. In context of an order or inquiry consider these items as a coherent model code. It serves for further processing. For a more in-depth look at the technical specifications, please refer to the relevant section under [Technical Specification].

**19.** MODELCODE ITEM — Begin of … (Hydraulic …

**Please note!**

This should be understood as a **model code example**. The **inquiry form** with the valid model code and current availabilities can be found on:

www.LHY.com

| Item | Feature | | | | | | | | | | |
|---|---|---|---|---|---|---|---|---|---|---|---|
| 19. | Begin of displacement control (hydraulic controllers only; as per 4.) | | | | | | | | | | |
| | **Characteristic** | | | | | | **Nominal size** | | | | **Spec.** |
| | | | Set value [bar] | | | | 060 | 085 | 115 | 140 | 170 | 215 | |
| **00** | | | Not applicable | | | | ○ | ● | ● | ● | ● | ● | |
| **[VALUE]** | | | Range 5 to 10 (numeric, 2 digits, only in 1 bar increments) | | | | ○ | ● | ● | ● | ● | ● | |

| **Signalization** | ● | ○ |
|---|---|---|
| **Availability from** | Now | Upon request |

| **Signalization** | |
|---|---|
| **Preference** | Preferred option |

# Configuration | Modelcode & Availability | **Regulation Begin of Pr… Override**

In the following you will find the Modelcode structure for inquiries in context of the [Configuration]. All features of the CMV are listed including brief specification. Please consider the availability and compatibility of the individual items regarding the relevant nominal size. In context of an order or inquiry consider these items as a coherent model code. It serves for further processing. For a more in-depth look at the technical specifications, please refer to the relevant section under [Technical Specification].

**20.** MODELCODE ITEM — Regulatio…

**Please note!**

This should be understood as a **model code example**. The **inquiry form** with the valid model code and current availabilities can be found on:

**www.LHY.com**

| Item | Feature | | | | | | | | | | | |
|---|---|---|---|---|---|---|---|---|---|---|---|---|
| 20. | Regulation begin of pressure override (as per 5.) | | | | | | | | | | | |
| | **Characteristic** | | | | | | | | **Nominal size** | | | **Spec.** |
| | | | Set value [bar] | | | | | | 060 | 085 | 115 | |
| **000** | | | Not applicable | | | | | | ○ | ● | ● | |
| **[VALUE]** | | | Range 80 to 400 (numeric, 3 digits, only in 10 bar increments) | | | | | | ○ | ● | ● | |

| Signalization | ● | ○ |
|---|---|---|
| **Availability from** | Now | Upon request |

| Signalization | |
|---|---|
| **Preference** | Preferred option |

OVERVIEW
Key Facts
CONFIGURATION
Modelcode & Availability
TECHNICAL SPECIFICATION
General Technical Data
Operating Parameters
Controls
Sensors
Electric Interfaces
Connectors
Mechanical Interfaces
Flanges
Shafts
Hydraulical Interfaces
Work Ports
Auxiliary Ports
Functions/Options

# Configuration | Modelcode & Availability | **Control Damping**

In the following you will find the Modelcode structure for inquiries in context of the [Configuration]. All features of the CMV are listed including brief specification. Please consider the availability and compatibility of the individual items regarding the relevant nominal size. In context of an order or inquiry consider these items as a coherent model code. It serves for further processing. For a more in-depth look at the technical specifications, please refer to the relevant section under [Technical Specification].

**Please note!**

This should be understood as a **model code example**. The **inquiry form** with the valid model code and current availabilities can be found on:

**www.LHY.com**

**21.** MODELCODE ITEM — Control Da

| Item | Feature | | | | | | | | | | | | | |
|---|---|---|---|---|---|---|---|---|---|---|---|---|---|---|
| 21. | Control damping | | | | | | | | | | | | | |
| | Characteristic | | | | | | | | | | | Nominal size | | Spec. |
| | | Option depends on controller configuration | | Undamped swiveling | Damped swiveling | | | | | | | 060 085 115 140 170 215 | | |
| | | Displacement controller | Pressure cotroller | | from Vgmin to Vgmax | from Vgmax to Vgmin | | | | | | | | |
| 1 | | E4 | 00 | P0 | ✓ | | | | | | | ○ ● ● ● ● ● | | |
| | | E6 | | | | | | | | | | ○ ● ● ● ● ● | | |
| | | H4 | | | | | | | | | | ○ ● ● ● ● ● | | |
| | | H6 | | | | | | | | | | ○ ● ● ● ● ● | | |
| | | E4 | 00 | P0 | | ✓ | | | | | | ○ ● ● ● ● ● | | |
| | | | | P1 | | ✓ | | | | | | ○ ● ● ● ● ● | | |
| | | | | P3 | | ✓ | | | | | | ○ ● ● ● ● ● | | |
| | | | | P8 | | ✓ | | | | | | ○ ● ● ● ● ● | | |
| | | E4 | | P0 | | ✓ | ✓ | | | | | ○ ● ● ● ● ● | | |
| | | H4 | | | | | | | | | | ○ ● ● ● ● ● | | |
| | | E4 | | P4 | | ✓ | ✓ | | | | | ○ ● ● ● ● ● | | |
| | | H4 | | | | | | | | | | ○ ● ● ● ● ● | | |
| | | H4 | | P6 | | ✓ | ✓ | | | | | ○ ● ● ● ● ● | | |

| Item | Feature | | | | | | | | | | | | | |
|---|---|---|---|---|---|---|---|---|---|---|---|---|---|---|
| | | | | | | | | | | | | | | |
| | Characteristic | | | | | | | | | | | Nominal size | | Spec. |
| | | Option depends on controller configuration | | Undamped swiveling | Damped swiveling | | | | | | | 060 085 115 140 170 215 | | |
| | | Displacement controller | Pressure cotroller | | from Vgmin to Vgmax | from Vgmax to Vgmin | | | | | | | | |
| 2 | | E4 | 00 | | ✓ | ✓ | | | | | | ○ ● ● ● ● ● | | |
| | | E6 | | | | | | | | | | ○ ● ● ● ● ● | | |
| | | H4 | | | | | | | | | | ○ ● ● ● ● ● | | |
| | | H6 | | | | | | | | | | ○ ● ● ● ● ● | | |

| Signalization | ● | ○ |
|---|---|---|
| Availability from | Now | Upon request |

| Signalization | ■ |
|---|---|
| Preference | Preferred option |

OVERVIEW
Key Facts
CONFIGURATION
Modelcode & Availability
TECHNICAL SPECIFICATION
General Technical Data
Operating Parameters
Controls
Sensors
Electric Interfaces
Connectors
Mechanical Interfaces
Flanges
Shafts
Hydraulical Interfaces
Work Ports
Auxiliary Ports
Functions/Options
General Technical Data

# Technical Specification | **General Technical Data**

In the following you will find the general technical data of the CMV. The values listed refer to the respective nominal size and take into account the general use. If these data do not correspond to the requirements in the context of your application, please contact us. Other values are available upon individual consideration of your application.

| General technical data | | | | 60 | 85 | 115 | 140 | 170 | 215 |
|---|---|---|---|---|---|---|---|---|---|
| Nominal size | | | | 60 | 85 | 115 | 140 | 170 | 215 |
| Displacement | $Vg_{max}$ | | cc/rev | 62 | 87.7 | 115.3 | 144.1 | 170 | 217.9 |
| | $Vg_x$ | at total pressure (A+B) = 40 bar | | upon request | 29.8 | 39.2 | 49 | 64.6 | 82.8 |
| | | at total pressure (A+B) = 120 bar | | - | - | - | - | 105.4 | 135.1 |
| | | at total pressure (A+B) = 140 bar | | upon request | 52.6 | 69.2 | 86.5 | - | - |
| | $Vg_{min}$ | | | 0 | 0 | 0 | 0 | 0 | 0 |
| Speed | Nominal speed | at $Vg_{max}$ | rpm | 4450 | 3900 | 3550 | 3250 | 3100 | 2900 |
| | | at $Vg \leq Vg_x$ | | 7200 | 6800 | 6150 | 5600 | 4900 | 4600 |
| | | at $Vg_{min}$ | | upon request | | | | | |
| Inlet flow | at $Vg_{max}$ | | l/min | upon request | 342.0 | 409.3 | 468.3 | 527.0 | 631.9 |
| Pressure[1] | Nominal pressure | | bar | 450 | | | | | |
| | Maximum pressure[2] | | bar | 500 | | | | | |
| | Maximum housing pressure | | bar | 2.5 | | | | | |
| Torque | Output torque at $\Delta p$= 430 bar | | Nm | 411 | 582 | 787 | 958 | 1163 | 1471 |
| Temperature | Perm. housing temperature | | °C | 90 | | | | | |
| Weight (without oil) approx. | | | kg | 27.7 | 36.3 | 44.8 | 59.2 | 62.1 | 76.4 |

[1] reference = ambient pressure ; [2] highest transient pressure, that can temporarily occur

OVERVIEW
Key Facts
CONFIGURATION
Modelcode & Availability
TECHNICAL SPECIFICATION
General Technical Data
Operating Parameters
Controls
Sensors
Electric Interfaces
Connectors
Mechanical Interfaces
Flanges
Shafts
Hydraulical Interfaces
Work Ports
Auxiliary Ports
Functions/Options
Operating Range
Pressure
Displacement/Speed
Recommendations
Operating Conditions
Filtration
Pressure Fluid
Viscosity/Temperature

# Technical Specification | Operating Parameters | **Pressure**

In the following you will find the operating parameters which should be considered to ensure safe operation under all prevailing conditions and a long service life of the CMV.

| Pressure at work port A or B | | | | Definition |
|---|---|---|---|---|
| Nominal pressure $p_{nom}$ | | bar | 450 | The nominal pressure corresponding to the maximum design pressure |
| Maximal pressure $p_{max}$ | | | 500 | Highest transient pressure, that can temporarily occur; reference = ambient pressure |
| Minimum pressure pump operating mode inlet | | | see the diagram | In order to prevent damage to the motor during pump operation (changing the the high-pressure side while the direction of rotation remains the same, e.g. during braking), a minimum pressure must be ensured at the work ports (inlet). |
| Maximum summation pressure $p_{su}$ (pressure A + pressure B) | | | upon request | The summation pressure is the sum of the pressures at both work ports (A and B); reference = ambient pressure |
| Rate of pressure change $RA_{max}$ | Without pressure relief valve | bar/s | 16000 | Maximum permissible rate of pressure build up and reduction during a pressure change over the entire pressure range (Definition see diagram) |
| | With pressure relief valve | | 9000 | |

OVERVIEW
Key Facts
CONFIGURATION
Modelcode & Availability
TECHNICAL SPECIFICATION
General Technical Data
Operating Parameters
Controls
Sensors
Electric Interfaces
Connectors
Mechanical Interfaces
Flanges
Shafts
Hydraulical Interfaces
Work Ports
Auxiliary Ports
Functions/Options
Operating Range
Pressure
Displacement/Speed
Recommendations
Operating Conditions
Filtration
Pressure Fluid
Viscosity/Temperature

# Technical Specification | Operating Parameters | **Pressure**

In the following you will find the operating parameters which should be considered to ensure safe operation under all prevailing conditions and a long service life of the CMV.

Definition Rate of pressure change RAmax

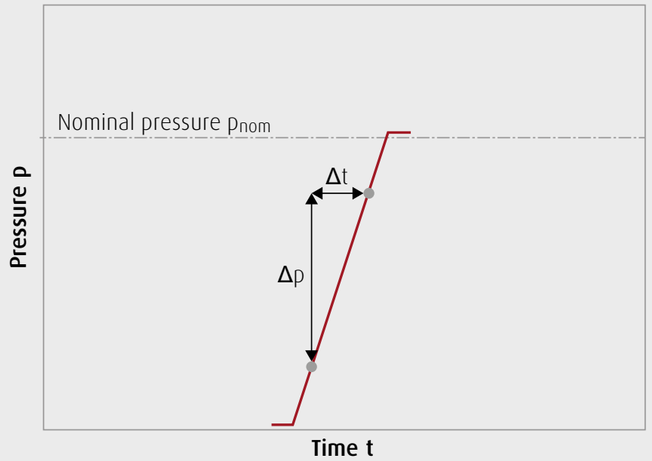

OVERVIEW
Key Facts
CONFIGURATION
Modelcode & Availability
TECHNICAL SPECIFICATION
General Technical Data
Operating Parameters
Controls
Sensors
Electric Interfaces
Connectors
Mechanical Interfaces
Flanges
Shafts
Hydraulical Interfaces
Work Ports
Auxiliary Ports
Functions/Options
Operating Range
Pressure
Displacement/Speed
Recommendations
Operating Conditions
Filtration
Pressure Fluid
Viscosity/Temperature

# Technical Specification | Operating Parameters | **Pressure**

In the following you will find the operating parameters which should be considered to ensure safe operation under all prevailing conditions and a long service life of the CMV.

## Minimum inlet pressure

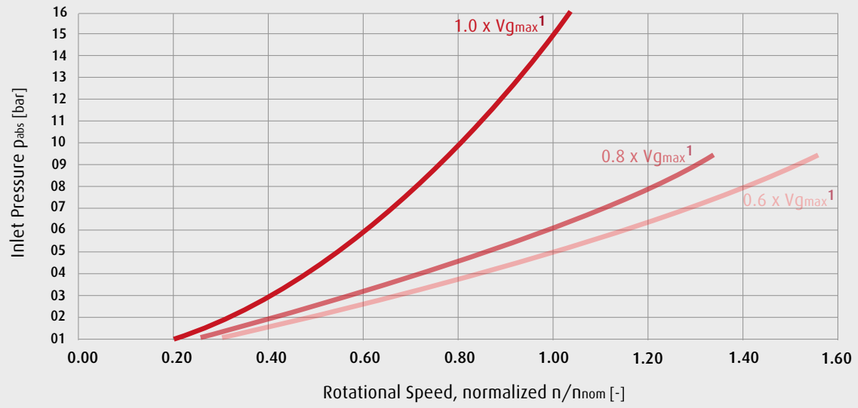


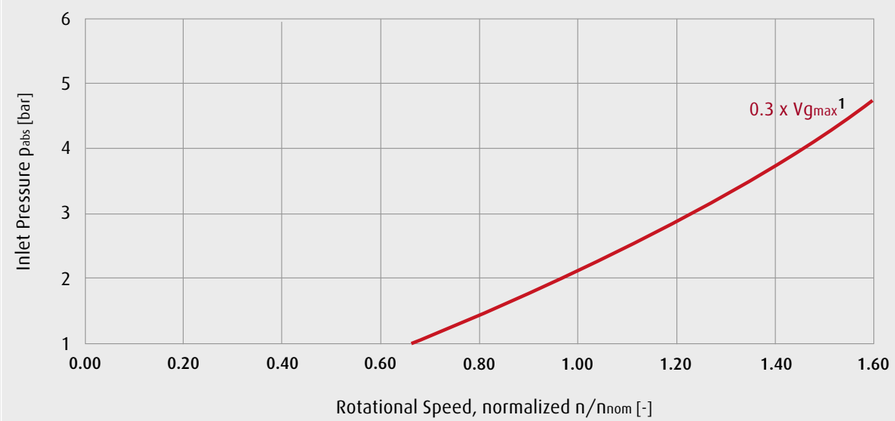


| | | | | | | | | |
|---|---|---|---|---|---|---|---|---|
| Data shown related to nominal size | 1 | CMV 85, CMV 115, CMV 140, CMV 170, CMV 215 | | | | | | |
| | | (data related to other sizes upon request) | | | | | | |
| | | | | | | | | |
| | | | | | | | | |

# Technical Specification | Operating Parameters | **Displacement/Speed**

In the following you will find the operating parameters which should be considered to ensure safe operation under all prevailing conditions and a long service life of the CMV.

## Permissible displacement as a function of speed

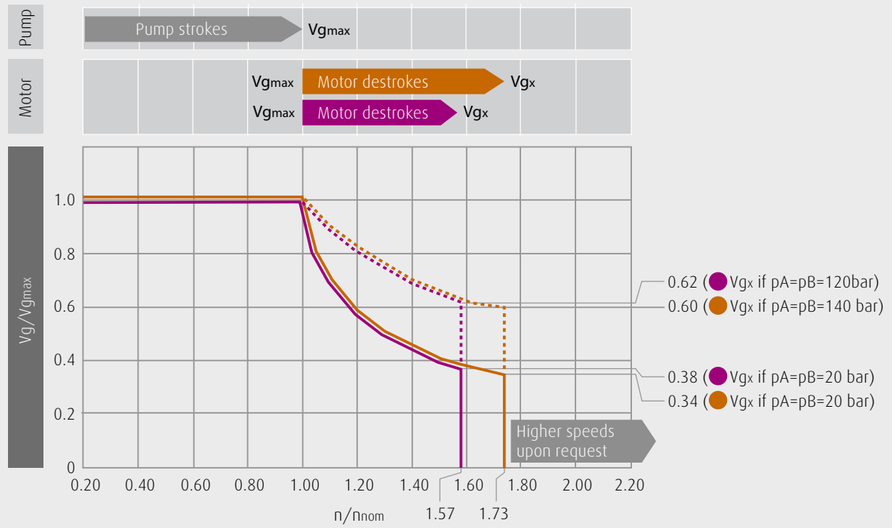


## Required total pressure as a function of speed

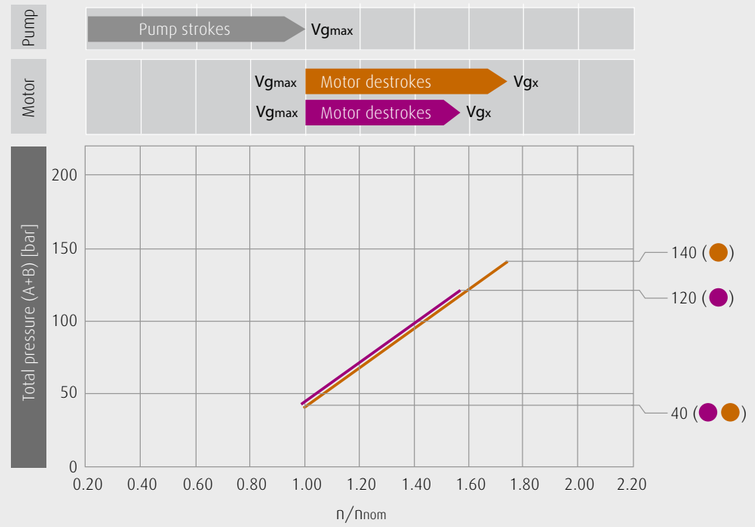


Data shown related to nominal size

- CMV 85, CMV 115, CMV 140
- CMV 170, CMV 215

# Technical Specification | Operating Parameters | **Operating Conditions**


OVERVIEW
- Key Facts

CONFIGURATION
- Modelcode & Availability

TECHNICAL SPECIFICATION
- General Technical Data
- Operating Parameters
- Controls
- Sensors
- Electric Interfaces
  - Connectors
- Mechanical Interfaces
  - Flanges
  - Shafts
- Hydraulical Interfaces
  - Work Ports
  - Auxiliary Ports
- Functions/Options

Operating Range
- Pressure
- Displacement/Speed

Recommendations
- Operating Conditions
- Filtration
- Pressure Fluid
- Viscosity/Temperature


In the following you will find the operating parameters which should be considered to ensure safe operation under all prevailing conditions and a long service life of the CMV.

| General technical data | | | | | |
|---|---|---|---|---|---|
| | | | | **Beneficial conditions** for long service life | **Adverse factors** for long service life |
| Nominal size | | | | All sizes | All sizes |
| Speed | Speed | | | Lower continuous maximum speed | Between nominal speed and maximum speed |
| | | | | | |
| Pressure | Operating pressure | | bar | <300 on average | >300 on average |
| | Max. pressure | | | Only at reduced displacement | |
| Power | | | | Continuous power or lower | Continuous operation close to maximum power |
| | | | | | |
| Fluid | Viscosity | | Centistokes (cSt) | 15 ... 30 | |
| | Purity of fluid | | | In accordance with ISO 4406 | In accordance with ISO 4406 |
| | | | | 18/16/13 or better | Worse than 18/16/13 |
| | | | | | |
| | | | | | |
| | | | | | |
| | | | | | |

OVERVIEW
Key Facts
CONFIGURATION
Modelcode & Availability
TECHNICAL SPECIFICATION
General Technical Data
Operating Parameters
Controls
Sensors
Electric Interfaces
Connectors
Mechanical Interfaces
Flanges
Shafts
Hydraulical Interfaces
Work Ports
Auxiliary Ports
Functions/Options
Operating Range
Pressure
Displacement/Speed
Recommendations
Operating Conditions
Filtration
Pressure Fluid
Viscosity/Temperature

# Technical Specification | Operating Parameters | **Filtration**

In the following you will find the operating parameters which should be considered to ensure safe operation under all prevailing conditions and a long service life of the CMV.

| Filtration | |
|---|---|
| For reliable proper function and long service life | 18/16/13 |
| Minimum requirements | 20/18/15 |
| Commissioning | The minimum purity requirement for the hydraulic oil is based on the most sensitive system component. For commissioning we recommend a filtration in order to achieve the required purity. |
| Filling and operation of hydraulic systems | The required purity of the hydraulic oil must be ensured during filling or topping up. When drums, canisters or large-capacity tanks are used the oil generally has to be filtered. We recommend the implementation of suitable measures (e.g. filters) to ensure that the required minimum purity of the oil is also achieved during operation. |
| Comparable international standards | Purity class according to ISO 4406 — corresponds to — Purity class according to SAE AS 4059 E<br>18/16/13 — 8A/7B/7C<br>20/18/15 — 9A/8B/8C |

# Technical Specification | Operating Parameters | **Pressure Fluid**


OVERVIEW
- Key Facts

CONFIGURATION
- Modelcode & Availability

TECHNICAL SPECIFICATION
- General Technical Data
- Operating Parameters
- Controls
- Sensors
- Electric Interfaces
  - Connectors
- Mechanical Interfaces
  - Flanges
  - Shafts
- Hydraulical Interfaces
  - Work Ports
  - Auxiliary Ports
- Functions/Options

Operating Range
- Pressure
- Displacement/Speed

Recommendations
- Operating Conditions
- Filtration
- Pressure Fluid
- Viscosity/Temperature


In the following you will find the operating parameters which should be considered to ensure safe operation under all prevailing conditions and a long service life of the CMV.

| Pressure fluid | | | |
|---|---|---|---|
| Pressure fluid | Permitted pressure fluids | | Mineral oil HLP according to DIN 51 524-2 |
| | | | Biodegradable fluids in accordance with ISO 15 380 on request |
| | | | Other pressure fluids on request |

OVERVIEW
Key Facts
CONFIGURATION
Modelcode & Availability
TECHNICAL SPECIFICATION
General Technical Data
Operating Parameters
Controls
Sensors
Electric Interfaces
Connectors
Mechanical Interfaces
Flanges
Shafts
Hydraulical Interfaces
Work Ports
Auxiliary Ports
Functions/Options
Operating Range
Pressure
Displacement/Speed
Recommendations
Operating Conditions
Filtration
Pressure Fluid
Viscosity/Temperature

# Technical Specification | Operating Parameters | **Temperature/Viscosity**

In the following you will find the operating parameters which should be considered to ensure safe operation under all prevailing conditions and a long service life of the CMV.

In order to be able to select the right hydraulic fluid it is necessary to know the working temperature in the hydraulic circuit. The hydraulic fluid should be selected that its optimum viscosity is within the working temperature range (see tables). The temperature should not exceed 90 °C in any part of the system. Due to pressure and speed influences the leakage fluid temperature is always higher than the circuit temperature. Please contact Linde Hydraulics if the stated conditions cannot be met in special circumstances.

| Viscosity/Temperature | | | | |
|---|---|---|---|---|
| Temperature | Perm. pressure fluid temperature range | | [°C] | -20 à +105 °C |
| Viscosity | Recommended viscosity ranges | Working viscosity range | [mm²/s] = [cSt] | 10 to 80 cSt |
| | | Optimum working viscosity | [mm²/s] = [cSt] | 15 to 30 cSt |
| | | Max. viscosity (short time during cold start) | [mm²/s] = [cSt] | 1000 cSt |
| | Optimum viscosity at temperature | Working temperature | [°C] | Viscosity class [mm²/s] = [cSt] at 40 °C |
| | | approx. 30 to 40 | | 22 cSt |
| | | approx. 40 to 60 | | 32 cSt |
| | | approx. 60 to 80 | | 46 or 68 cSt |

# Technical Specification | Controls | Displacement Controller | **00**


OVERVIEW
- Key Facts

CONFIGURATION
- Modelcode & Availability

TECHNICAL SPECIFICATION
- General Technical Data
- Operating Parameters
- Controls
- Sensors
- Electric Interfaces
  - Connectors
- Mechanical Interfaces
  - Flanges
  - Shafts
- Hydraulical Interfaces
  - Work Ports
  - Auxiliary Ports
- Functions/Options

Displacement Control
- Electrical Controller
  - 00
  - E2
  - E4
  - E5
  - E6
- Hydraulic Controller
  - H2
  - H4
  - H5
  - H6

Pressure Control/ Override
- 00
- P0
- P1
- P3
- P4
- P6
- P8


In the following you will find the technical specifications of the displacement and pressure controllers for the CMV. These are subdivided into electric and hydraulic displacement controllers as well as pressure controllers or override signals. First get an overview of the basic specs, options and characteristics. Note the short designations such as „E2“ or „P0“. In the section Find Model Code & Availability, you can then check the availability of the corresponding controllers and compile your desired configuration using the short designations as a segment of the model code.

The displacement controller with the abbreviation „00“ is not an individual function. In this case, the component for diplacement and pressure control does not support dispacement control. The motor is in default position $V_{g\,min}$. When choosing this option, a pressure controller must be considered to control the motor.

| Basic Specification | | | | | | |
|---|---|---|---|---|---|---|
| Magnet | | | | | 12 V | 24 V |
| Voltage | | | | V | - | - |
| Begin of Control/ Default position | $V_{g\,min}$/ Minimum Torque/ Maximum Speed | Current | | mA | - | - |
| End of Control | $V_{g\,min}$/ Minimum Torque/ Maximum Speed | | | | - | - |
| Limit | | Limit current | | A | - | - |
| Solenoid | | Electrical resistance | | Ω | - | - |
| Dither | | Frequency | | Hz | - | - |
| | | Minimum amplitude | | mA | - | - |
| Duty Cycle | | | | % | - | - |
| Control press. supply | Minimum pressure at work port A/B | | | bar | - | |
| Protection class | | | | | No connector | |

| Options | | | | | | | | | | |
|---|---|---|---|---|---|---|---|---|---|---|
| Damping | Nominal size | | | | 60 | 85 | 115 | 140 | 170 | 215 |
| | Swiveling speed at 200 bar | Undamped | 1/4 $V_{g\,max}$ -> $V_{g\,max}$ | s | - | - | - | - | - | - |
| | | | $V_{g\,max}$ -> 1/4 $V_{g\,max}$ | | - | - | - | - | - | - |
| | | Damped | 1/4 $V_{g\,max}$ -> $V_{g\,max}$ | | - | - | - | - | - | - |
| | | | $V_{g\,max}$ -> 1/4 $V_{g\,max}$ | | - | - | - | - | - | - |

**Characteristic**

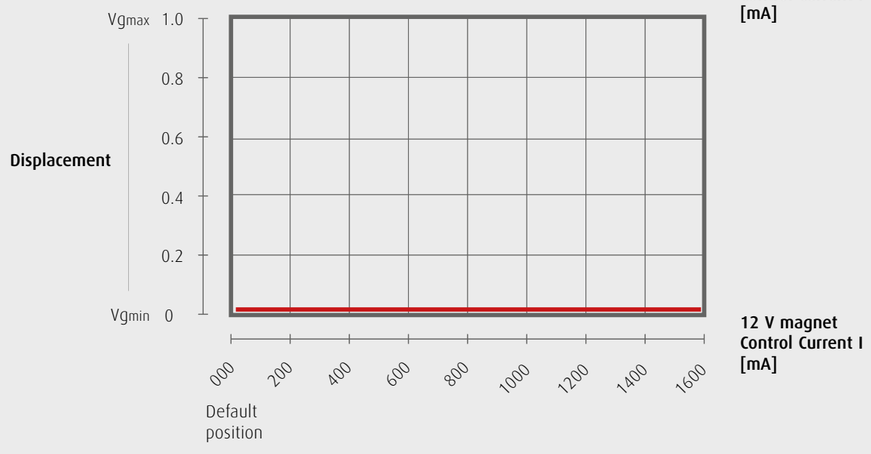

OVERVIEW
Key Facts
CONFIGURATION
Modelcode & Availability
TECHNICAL SPECIFICATION
General Technical Data
Operating Parameters
Controls
Sensors
Electric Interfaces
Connectors
Mechanical Interfaces
Flanges
Shafts
Hydraulical Interfaces
Work Ports
Auxiliary Ports
Functions/Options
Displacement Control
Electrical Controller
00
E2
E4
E5
E6
Hydraulic Controller
H2
H4
H5
H6
Pressure Control/ Override
00
P0
P1
P3
P4
P6
P8

# Technical Specification | Controls | Displacement Controller | **00**

In the following you will find the technical specifications of the displacement and pressure controllers for the CMV. These are subdivided into electric and hydraulic displacement controllers as well as pressure controllers or override signals. First get an overview of the basic specs, options and characteristics. Note the short designations such as „E2“ or „P0“. In the section Find Model Code & Availability, you can then check the availability of the corresponding controllers and compile your desired configuration using the short designations as a segment of the model code.

## Hydraulic Diagram (Configuration Examples)

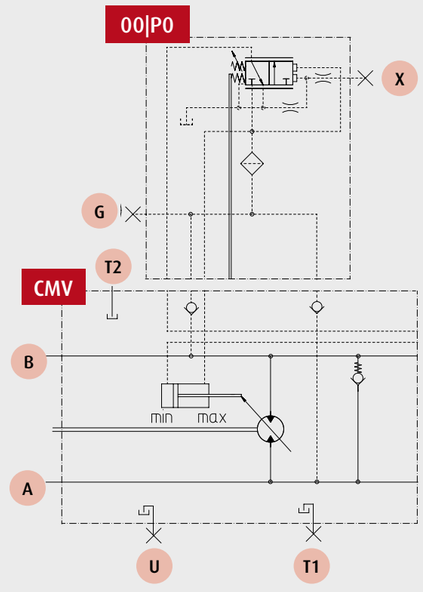


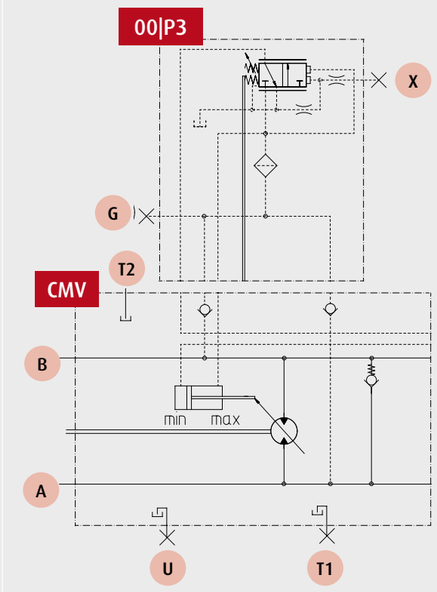


| | | | |
|---|---|---|---|
| CMV | Basic motor (without Controls/Functions/Options) | T1 | Drain/vent ports, ISO6149 |
| | | T2 | |
| A | High pressure work ports, ISO 6162-2 | U | Drain/vent port, ISO6149 |
| B | | | |

| | | | |
|---|---|---|---|
| 00\|P0 | Displ. Contrl. 00 + Press. Contrl. P0 | | |
| 00\|P3 | Displ. Contrl. 00 + Press. Contrl. P3 | | |
| G | External control pressure supply | | |
| | | | |

OVERVIEW
Key Facts
CONFIGURATION
Modelcode & Availability
TECHNICAL SPECIFICATION
General Technical Data
Operating Parameters
Controls
Sensors
Electric Interfaces
Connectors
Mechanical Interfaces
Flanges
Shafts
Hydraulical Interfaces
Work Ports
Auxiliary Ports
Functions/Options
Displacement Control
Electrical Controller
00
E2
E4
E5
E6
Hydraulic Controller
H2
H4
H5
H6
Pressure Control/ Override
00
P0
P1
P3
P4
P6
P8

# Technical Specification | Controls | Displacement Controller | **E2**

In the following you will find the technical specifications of the displacement and pressure controllers for the CMV. These are subdivided into electric and hydraulic displacement controllers as well as pressure controllers or override signals. First get an overview of the basic specs, options and characteristics. Note the short designations such as „E2“ or „P0“. In the section Find Model Code & Availability, you can then check the availability of the corresponding controllers and compile your desired configuration using the short designations as a segment of the model code.

The displacement controller E2 is an electric controller that enables 2-point negative control and default position $V_{g max}$. In addition, one-sided or two-sided damping is optionally available. The control pressure supply operates with oil from the high-pressure circuit. Accordingly, for reliable functionality under all conditions, a minimum pressure must be ensured. If the working pressure level is too low for the control function, the required pressue can be connected to the port “G” from an outside pressure supply.

## Basic Specification

| | | | | | |
|---|---|---|---|---|---|
| Magnet | | | | 12 V | 24 V |
| Voltage | | | V | 12 (-10%/+ 20 %) | 24 (-10%/+ 20%) |
| Begin of Control/ Default position | $V_{g max}$/ Maximum Torque/ Minimum Speed | Status solenoid | | Solenoid unenergized | |
| End of Control | $V_{g min}$/ Minimum Torque/ Maximum Speed | | | Solenoid energized | |
| Solenoid | | Electrical resistence | Ω | 6.3 | 24.6 |
| Duty Cycle | | | % | 100 | 100 |
| Control press. supply | Minimum pressure at work port A/B | | bar | 30 | |
| Protection class | | | | See connector | |

## Options

| | | | | | 60 | 85 | 115 | 140 | 170 | 215 |
|---|---|---|---|---|---|---|---|---|---|---|
| Damping | Nominal size | | | | | | | | | |
| | Approx. swiveling speed at 200 bar | Undamped | 1/4 $V_{g max}$ -> $V_{g max}$ | s | upon request | upon request | upon request | upon request | upon request | upon request |
| | | | $V_{g max}$ -> 1/4 $V_{g max}$ | | upon request | upon request | upon request | upon request | upon request | upon request |
| | | Damped | 1/4 $V_{g max}$ -> $V_{g max}$ | | upon request | upon request | upon request | upon request | upon request | upon request |
| | | | $V_{g max}$ -> 1/4 $V_{g max}$ | | upon request | upon request | upon request | upon request | upon request | upon request |

## Characteristic

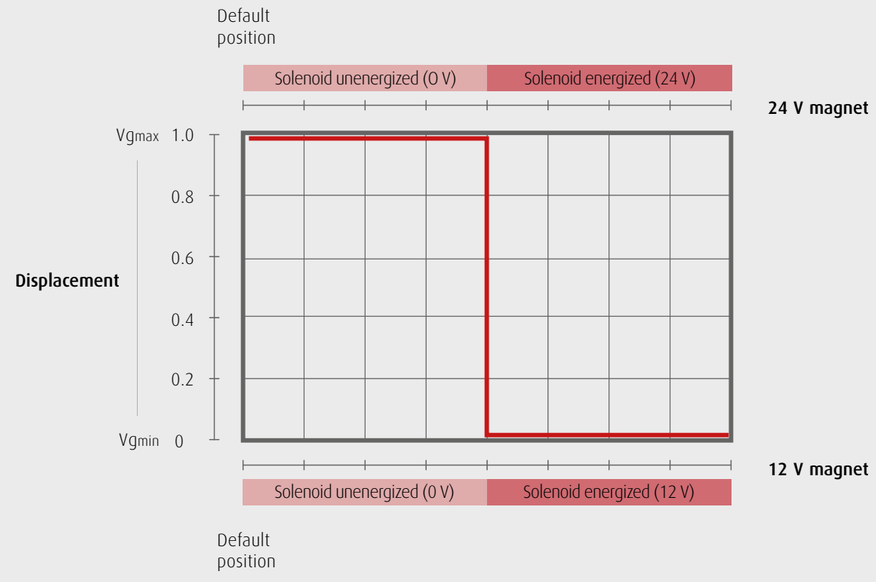


Displacement control is to be considered as a basic control function. If a combination with a pressure control function is applied, this overrides the displacement control within the corresponding control range.

Linde Hydraulics


OVERVIEW

Key Facts

CONFIGURATION

Modelcode & Availability

TECHNICAL SPECIFICATION

General Technical Data

Operating Parameters

Controls

Sensors

Electric Interfaces

Connectors

Mechanical Interfaces

Flanges

Shafts

Hydraulical Interfaces

Work Ports

Auxiliary Ports

Functions/Options

Displacement Control

Electrical Controller

00

E2

E4

E5

E6

Hydraulic Controller

H2

H4

H5

H6

Pressure Control/ Override

00

P0

P1

P3

P4

P6

P8


# Technical Specification | Controls | Displacement Controller | **E2**

In the following you will find the technical specifications of the displacement and pressure controllers for the CMV. These are subdivided into electric and hydraulic displacement controllers as well as pressure controllers or override signals. First get an overview of the basic specs, options and characteristics. Note the short designations such as „E2“ or „P0“. In the section Find Model Code & Availability, you can then check the availability of the corresponding controllers and compile your desired configuration using the short designations as a segment of the model code.

## Hydraulic Diagram (Configuration Examples)

Hydraulic diagram upon request

Hydraulic diagram upon request

Hydraulic diagram upon request

Hydraulic diagram upon request

# Technical Specification | Controls | Displacement Controller | **E4**

In the following you will find the technical specifications of the displacement and pressure controllers for the CMV. These are subdivided into electric and hydraulic displacement controllers as well as pressure controllers or override signals. First get an overview of the basic specs, options and characteristics. Note the short designations such as „E2“ or „P0“. In the section Find Model Code & Availability, you can then check the availability of the corresponding controllers and compile your desired configuration using the short designations as a segment of the model code.

The displacement controller E4 is an electric controller that enables stepless negative control (proportional to the applied control current) and default position $Vg_{max}$. In addition, one-sided or two-sided damping is optionally available. The control pressure supply operates with oil from the high-pressure circuit. Accordingly, for reliable functionality under all conditions, a minimum pressure must be ensured. If the working pressure level is too low for the control function, the required pressue can be connected to the port “G” from an outside pressure supply.

| Basic Specification | | | | | | | | | | |
|---|---|---|---|---|---|---|---|---|---|---|
| Magnet | | | | | 12 V | 24 V | | | | |
| Voltage | | | | V | 12 (-10%/+ 20 %) | 24 (-10%/+ 20%) | | | | |
| Begin of Control/ Default position | $Vg_{max}$/ Maximum Torque/ Minimum Speed | Current | | mA | 450 | 225 | | | | |
| End of Control | $Vg_{min}$/ Minimum Torque/ Maximum Speed | | | | 1050 | 525 | | | | |
| Limit | | Limit current | | A | 1.3 | 0.65 | | | | |
| Solenoid | | Electrical resistance | | Ω | 6.3 | 24.6 | | | | |
| Dither | | Frequency | | Hz | 100 | 100 | | | | |
| | | Minimum amplitude | | mA | 320 | 160 | | | | |
| Duty Cycle | | | | % | 100 | 100 | | | | |
| Control press. supply | Minimum pressure at work port A/B | | | bar | 30 | | | | | |
| Protection class | | | | | See connector | | | | | |
| **Options** | | | | | | | | | | |
| Damping | Nominal size | | | | 60 | 85 | 115 | 140 | 170 | 215 |
| | Approx. swiveling speed at 200 bar | Undamped | 1/4 $Vg_{max}$ -> $Vg_{max}$ | s | - | 0.15 | 0.2 | 0.2 | 0.3 | 0.5 |
| | | | $Vg_{max}$ -> 1/4 $Vg_{max}$ | | - | 0.15 | 0.2 | 0.2 | 0.3 | 0.5 |
| | | Damped | 1/4 $Vg_{max}$ -> $Vg_{max}$ | | - | 0.3 | 0.5 | 0.5 | 0.6 | 1.0 |
| | | | $Vg_{max}$ -> 1/4 $Vg_{max}$ | | - | 0.3 | 0.5 | 0.5 | 0.6 | 1.0 |

**Characteristic**

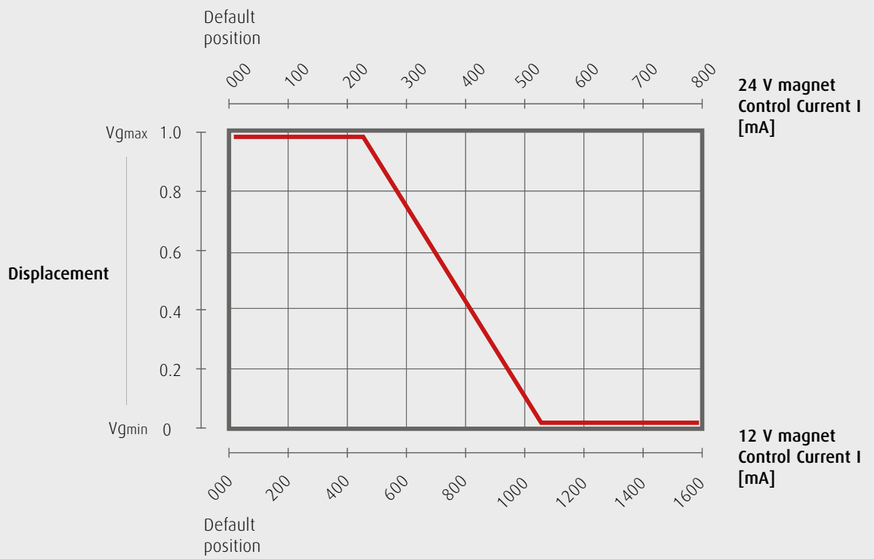


Displacement control is to be considered as a basic control function. If a combination with a pressure control function is applied, this overrides the displacement control within the corresponding control range.

# Technical Specification | Controls | Displacement Controller | **E4**

In the following you will find the technical specifications of the displacement and pressure controllers for the CMV. These are subdivided into electric and hydraulic displacement controllers as well as pressure controllers or override signals. First get an overview of the basic specs, options and characteristics. Note the short designations such as „E2“ or „P0“. In the section Find Model Code & Availability, you can then check the availability of the corresponding controllers and compile your desired configuration using the short designations as a segment of the model code.

## Hydraulic Diagram (Configuration Examples)

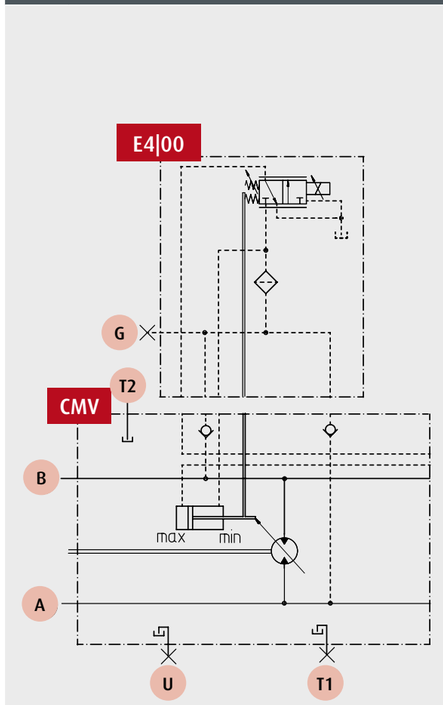


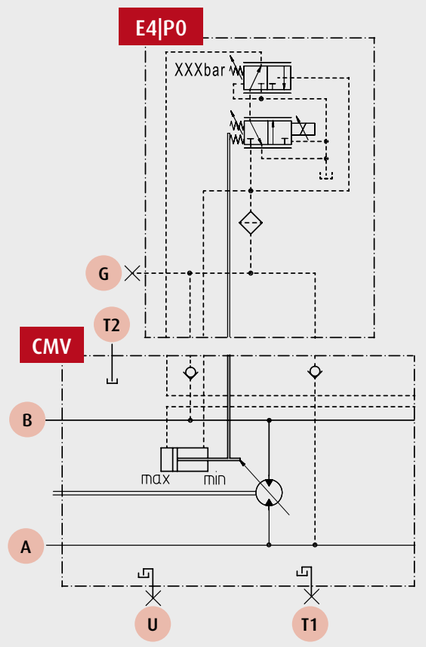


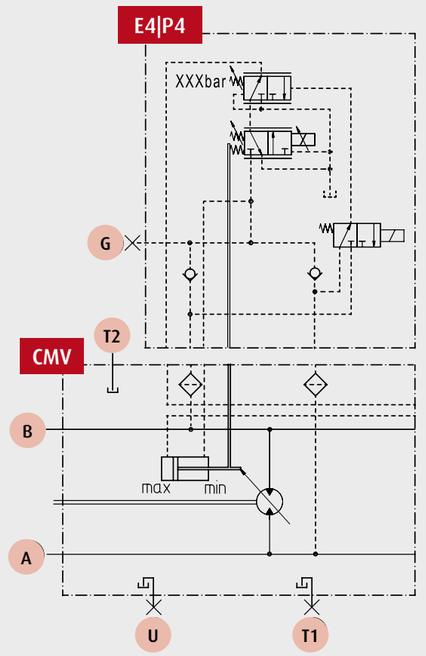


| | | | |
|---|---|---|---|
| CMV | Basic motor (without Controls/Functions/Options) | T1 | Drain/vent ports, ISO6149 |
| | | T2 | |
| A | High pressure work ports, ISO 6162-2 | U | Drain/vent port, ISO6149 |
| B | | | |

| | | | |
|---|---|---|---|
| E4\|00 | Displ. Contrl. E4 + Press. Contrl. 00 | | |
| E4\|P0 | Displ. Contrl. E4 + Press. Contrl. P0 | | |
| E4\|P4 | Displ. Contrl. E4 + Press. Contrl. P4 | | |
| G | External control pressure supply | | |

# Technical Specification | Controls | Displacement Controller | **E5**


OVERVIEW
- Key Facts

CONFIGURATION
- Modelcode & Availability

TECHNICAL SPECIFICATION
- General Technical Data
- Operating Parameters
- Controls
- Sensors
- Electric Interfaces
  - Connectors
- Mechanical Interfaces
  - Flanges
  - Shafts
- Hydraulical Interfaces
  - Work Ports
  - Auxiliary Ports
- Functions/Options

Displacement Control
- Electrical Controller
  - 00
  - E2
  - E4
  - E5
  - E6
- Hydraulic Controller
  - H2
  - H4
  - H5
  - H6

Pressure Control/ Override
- 00
- P0
- P1
- P3
- P4
- P6
- P8


In the following you will find the technical specifications of the displacement and pressure controllers for the CMV. These are subdivided into electric and hydraulic displacement controllers as well as pressure controllers or override signals. First get an overview of the basic specs, options and characteristics. Note the short designations such as „E2“ or „P0“. In the section Find Model Code & Availability, you can then check the availability of the corresponding controllers and compile your desired configuration using the short designations as a segment of the model code.

The displacement controller E5 is an electric controller that enables 2-point positive control and default position $Vg_{min}$. In addition, one-sided or two-sided damping is optionally available. The control pressure supply operates with oil from the high-pressure circuit. Accordingly, for reliable functionality under all conditions, a minimum pressure must be ensured. If the working pressure level is too low for the control function, the required pressue can be connected to the port “G” from an outside pressure supply.

## Basic Specification

| | | | | | |
|---|---|---|---|---|---|
| Magnet | | | | 12 V | 24 V |
| Voltage | | | V | 12 (-10%/+ 20 %) | 24 (-10%/+ 20%) |
| Begin of Control/ Default position | $Vg_{min}$/ Minimum Torque/ Maximum Speed | Status solenoid | | Solenoid unenergized | |
| End of Control | $Vg_{max}$/ Maximum Torque/ Minimum Speed | | | Solenoid energized | |
| Solenoid | | Electrical resistence | Ω | 6.3 | 24.6 |
| Duty Cycle | | | % | 100 | 100 |
| Control press. supply | Minimum pressure at work port A/B | | bar | 30 | |
| Protection class | | | | See connector | |

## Options

| | | | | | 60 | 85 | 115 | 140 | 170 | 215 |
|---|---|---|---|---|---|---|---|---|---|---|
| Damping | Nominal size | | | | | | | | | |
| | Approx. swiveling speed at 200 bar | Undamped | 1/4 $Vg_{max}$ -> $Vg_{max}$ | s | upon request | upon request | upon request | upon request | upon request | upon request |
| | | | $Vg_{max}$ -> 1/4 $Vg_{max}$ | | upon request | upon request | upon request | upon request | upon request | upon request |
| | | Damped | 1/4 $Vg_{max}$ -> $Vg_{max}$ | | upon request | upon request | upon request | upon request | upon request | upon request |
| | | | $Vg_{max}$ -> 1/4 $Vg_{max}$ | | upon request | upon request | upon request | upon request | upon request | upon request |

## Characteristic

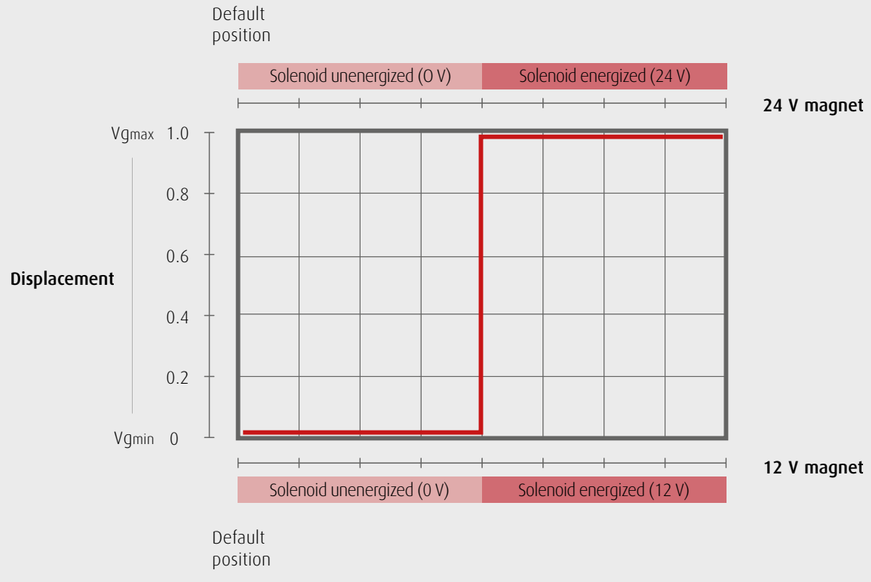


Displacement control is to be considered as a basic control function. If a combination with a pressure control function is applied, this overrides the displacement control within the corresponding control range.

# Technical Specification | Controls | Displacement Controller | **E5**


OVERVIEW
- Key Facts

CONFIGURATION
- Modelcode & Availability

TECHNICAL SPECIFICATION
- General Technical Data
- Operating Parameters
- Controls
- Sensors
- Electric Interfaces
  - Connectors
- Mechanical Interfaces
  - Flanges
  - Shafts
- Hydraulical Interfaces
  - Work Ports
  - Auxiliary Ports
- Functions/Options

Displacement Control
- Electrical Controller
  - 00
  - E2
  - E4
  - E5
  - E6
- Hydraulic Controller
  - H2
  - H4
  - H5
  - H6

Pressure Control/ Override
- 00
- P0
- P1
- P3
- P4
- P6
- P8


In the following you will find the technical specifications of the displacement and pressure controllers for the CMV. These are subdivided into electric and hydraulic displacement controllers as well as pressure controllers or override signals. First get an overview of the basic specs, options and characteristics. Note the short designations such as „E2“ or „P0“. In the section Find Model Code & Availability, you can then check the availability of the corresponding controllers and compile your desired configuration using the short designations as a segment of the model code.

## Hydraulic Diagram (Configuration Examples)

Hydraulic diagram upon request

Hydraulic diagram upon request

Hydraulic diagram upon request

Hydraulic diagram upon request

# Technical Specification | Controls | Displacement Controller | **E6**


OVERVIEW
- Key Facts

CONFIGURATION
- Modelcode & Availability

TECHNICAL SPECIFICATION
- General Technical Data
- Operating Parameters
- Controls
- Sensors
- Electric Interfaces
  - Connectors
- Mechanical Interfaces
  - Flanges
  - Shafts
- Hydraulical Interfaces
  - Work Ports
  - Auxiliary Ports
- Functions/Options

Displacement Control
- Electrical Controller
  - 00
  - E2
  - E4
  - E5
  - E6
- Hydraulic Controller
  - H2
  - H4
  - H5
  - H6

Pressure Control/ Override
- 00
- P0
- P1
- P3
- P4
- P6
- P8


In the following you will find the technical specifications of the displacement and pressure controllers for the CMV. These are subdivided into electric and hydraulic displacement controllers as well as pressure controllers or override signals. First get an overview of the basic specs, options and characteristics. Note the short designations such as „E2“ or „P0“. In the section Find Model Code & Availability, you can then check the availability of the corresponding controllers and compile your desired configuration using the short designations as a segment of the model code.

The displacement controller E6 is an electric controller that enables stepless positive control (proportional to the applied control current) and default position $Vg_{min}$. In addition, one-sided or two-sided damping is optionally available. The control pressure supply operates with oil from the high-pressure circuit. Accordingly, for reliable functionality under all conditions, a minimum pressure must be ensured. If the working pressure level is too low for the control function, the required pressue can be connected to the port “G” from an outside pressure supply.

| Basic Specification | | | | | | | | | | |
|---|---|---|---|---|---|---|---|---|---|---|
| Magnet | | | | | 12 V | | | | 24 V | |
| Voltage | | | | V | 12 (-10%/+ 20 %) | | | | 24 (-10%/+ 20%) | |
| Begin of Control/ Default position | $Vg_{min}$/ Minimum Torque/ Maximum Speed | Current | | mA | 450 | | | | 225 | |
| End of Control | $Vg_{max}$/ Maximum Torque/ Minimum Speed | | | | 1050 | | | | 525 | |
| Limit | | Limit current | | A | 1.3 | | | | 0.65 | |
| Solenoid | | Electrical resistence | | Ω | 6.3 | | | | 24.6 | |
| Dither | | Frequency | | Hz | 100 | | | | 100 | |
| | | Minimum amplitude | | mA | 320 | | | | 160 | |
| Duty Cycle | | | | % | 100 | | | | 100 | |
| Control press. supply | Minimum pressure at work port A/B | | | bar | 30 | | | | | |
| Protection class | | | | | See connector | | | | | |
| **Options** | | | | | | | | | | |
| Damping | Nominal size | | | | 60 | 85 | 115 | 140 | 170 | 215 |
| | Approx. swiveling speed at 200 bar | Undamped | 1/4 $Vg_{max}$ -> $Vg_{max}$ | s | - | 0.15 | 0.2 | 0.2 | 0.3 | 0.5 |
| | | | $Vg_{max}$ -> 1/4 $Vg_{max}$ | | - | 0.15 | 0.2 | 0.2 | 0.3 | 0.5 |
| | | Damped | 1/4 $Vg_{max}$ -> $Vg_{max}$ | | - | 0.3 | 0.5 | 0.5 | 0.6 | 1.0 |
| | | | $Vg_{max}$ -> 1/4 $Vg_{max}$ | | - | 0.3 | 0.5 | 0.5 | 0.6 | 1.0 |

**Characteristic**

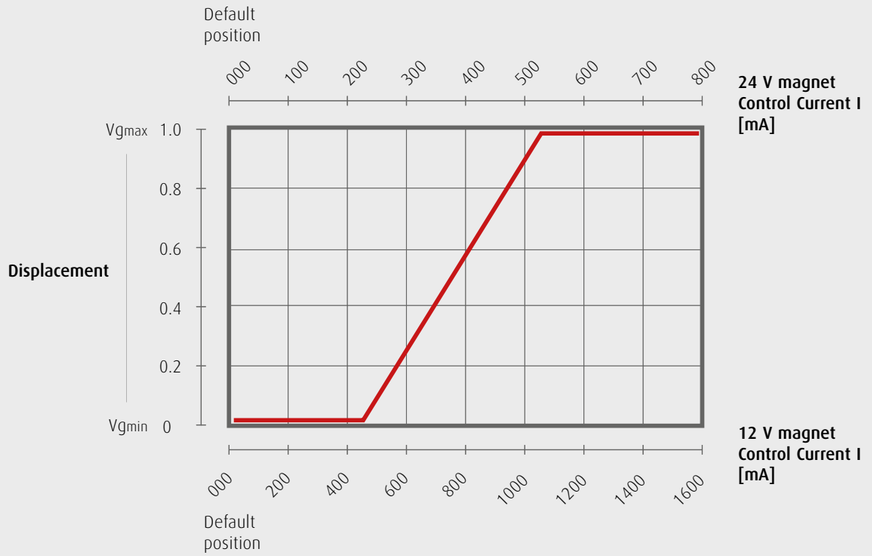


Displacement control is to be considered as a basic control function. If a combination with a pressure control function is applied, this overrides the displacement control within the corresponding control range.

OVERVIEW
Key Facts
CONFIGURATION
Modelcode & Availability
TECHNICAL SPECIFICATION
General Technical Data
Operating Parameters
Controls
Sensors
Electric Interfaces
Connectors
Mechanical Interfaces
Flanges
Shafts
Hydraulical Interfaces
Work Ports
Auxiliary Ports
Functions/Options
Displacement Control
Electrical Controller
00
E2
E4
E5
E6
Hydraulic Controller
H2
H4
H5
H6
Pressure Control/ Override
00
P0
P1
P3
P4
P6
P8

# Technical Specification | Controls | Displacement Controller | **E6**

In the following you will find the technical specifications of the displacement and pressure controllers for the CMV. These are subdivided into electric and hydraulic displacement controllers as well as pressure controllers or override signals. First get an overview of the basic specs, options and characteristics. Note the short designations such as „E2“ or „P0“. In the section Find Model Code & Availability, you can then check the availability of the corresponding controllers and compile your desired configuration using the short designations as a segment of the model code.

## Hydraulic Diagram (Configuration Examples)

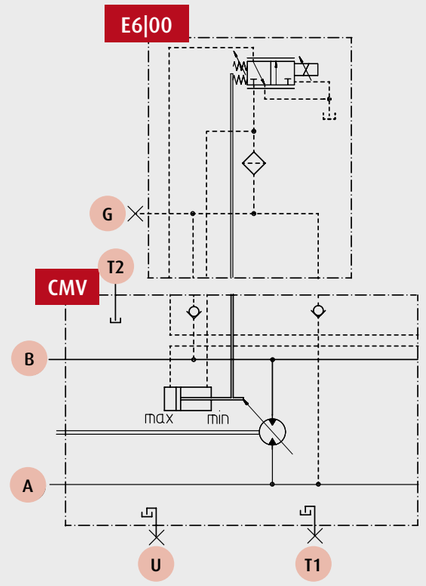


| | | | |
|---|---|---|---|
| CMV | Basic motor (without Controls/Functions/Options) | T1 | Drain/vent ports, ISO6149 |
| | | T2 | |
| A | High pressure work ports, ISO 6162-2 | U | Drain/vent port, ISO6149 |
| B | | | |

| | | | |
|---|---|---|---|
| E6\|00 | Displ. Contrl. E6 + Press. Contrl. 00 | | |
| G | External control pressure supply | | |
| | | | |
| | | | |

# Technical Specification | Controls | Displacement Controller | **H2**


OVERVIEW
- Key Facts

CONFIGURATION
- Modelcode & Availability

TECHNICAL SPECIFICATION
- General Technical Data
- Operating Parameters
- Controls
- Sensors
- Electric Interfaces
  - Connectors
- Mechanical Interfaces
  - Flanges
  - Shafts
- Hydraulical Interfaces
  - Work Ports
  - Auxiliary Ports
- Functions/Options

Displacement Control
- Electrical Controller
  - 00
  - E2
  - E4
  - E5
  - E6
- Hydraulic Controller
  - H2
  - H4
  - H5
  - H6

Pressure Control/ Override
- 00
- P0
- P1
- P3
- P4
- P6
- P8


In the following you will find the technical specifications of the displacement and pressure controllers for the CMV. These are subdivided into electric and hydraulic displacement controllers as well as pressure controllers or override signals. First get an overview of the basic specs, options and characteristics. Note the short designations such as „E2“ or „P0“. In the section Find Model Code & Availability, you can then check the availability of the corresponding controllers and compile your desired configuration using the short designations as a segment of the model code.

The displacement controller H2 is an hydraulic controller that enables 2-point negative control and default position $V_{g\,max}$. In addition, one-sided or two-sided damping is optionally available. The control pressure supply operates with oil from the high-pressure circuit. Accordingly, for reliable functionality under all conditions, a minimum pressure must be ensured. If the working pressure level is too low for the control function, the required pressue can be connected to the port “G” from an outside pressure supply.

**Basic Specification**

| | | | | | |
|---|---|---|---|---|---|
| Begin of control/ Default position | $V_{g\,max}$/ Maximum torque/ Minimum speed | Control pressure (pst) | | bar | Pilot port unpressurized |
| End of control | $V_{g\,min}$/ Minimum torque/ Maximum speed | Control pressure (pst) | | bar | Pilot port pressurized (approx. from 20 to 40) |
| Reference | Reference pressure | | | bar | Case pressure |
| Limit | Maximum pilot pressure | | | bar | 50 |
| Control press. supply | Minimum pressure at work port A/B | | | bar | 30 |
| Threaded port | | | | | ISO 6149-1 M14x1.5 |

| | | | | | 60 | 85 | 115 | 140 | 170 | 215 |
|---|---|---|---|---|---|---|---|---|---|---|
| Damping | Nominal size | | | s | | | | | | |
| | Approx. swiveling speed at 200 bar | Undamped | 1/4 $V_{g\,max}$ -> $V_{g\,max}$ | s | - | 0.15 | 0.2 | 0.2 | 0.3 | 0.5 |
| | | | $V_{g\,max}$ -> 1/4 $V_{g\,max}$ | s | - | 0.15 | 0.2 | 0.2 | 0.3 | 0.5 |
| | | Damped | 1/4 $V_{g\,max}$ -> $V_{g\,max}$ | s | - | 0.3 | 0.5 | 0.5 | 0.6 | 1.0 |
| | | | $V_{g\,max}$ -> 1/4 $V_{g\,max}$ | s | - | 0.3 | 0.5 | 0.5 | 0.6 | 1.0 |

**Characteristic**

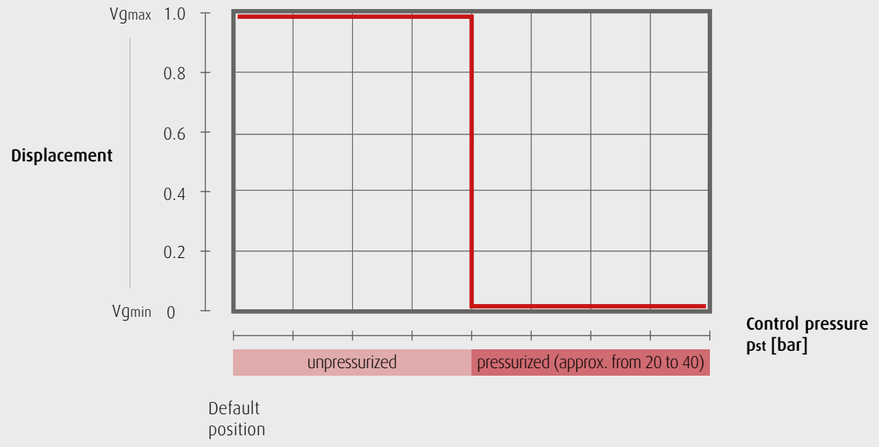


Displacement control is to be considered as a basic control function. If a combination with a pressure control function is applied, this overrides the displacement control within the corresponding control range.

Linde Hydraulics


OVERVIEW

Key Facts

CONFIGURATION

Modelcode & Availability

TECHNICAL SPECIFICATION

General Technical Data

Operating Parameters

Controls

Sensors

Electric Interfaces

Connectors

Mechanical Interfaces

Flanges

Shafts

Hydraulical Interfaces

Work Ports

Auxiliary Ports

Functions/Options

Displacement Control

Electrical Controller

00

E2

E4

E5

E6

Hydraulic Controller

H2

H4

H5

H6

Pressure Control/ Override

00

P0

P1

P3

P4

P6

P8


# Technical Specification | Controls | Displacement Controller | **H2**

In the following you will find the technical specifications of the displacement and pressure controllers for the CMV. These are subdivided into electric and hydraulic displacement controllers as well as pressure controllers or override signals. First get an overview of the basic specs, options and characteristics. Note the short designations such as „E2“ or „P0“. In the section Find Model Code & Availability, you can then check the availability of the corresponding controllers and compile your desired configuration using the short designations as a segment of the model code.

## Hydraulic Diagram (Configuration Examples)

Hydraulic diagram upon request

Hydraulic diagram upon request

Hydraulic diagram upon request

Hydraulic diagram upon request

# Technical Specification | Controls | Displacement Controller | **H4**


OVERVIEW
- Key Facts

CONFIGURATION
- Modelcode & Availability

TECHNICAL SPECIFICATION
- General Technical Data
- Operating Parameters
- Controls
- Sensors
- Electric Interfaces
  - Connectors
- Mechanical Interfaces
  - Flanges
  - Shafts
- Hydraulical Interfaces
  - Work Ports
  - Auxiliary Ports
- Functions/Options

Displacement Control
- Electrical Controller
  - 00
  - E2
  - E4
  - E5
  - E6
- Hydraulic Controller
  - H2
  - H4
  - H5
  - H6

Pressure Control/ Override
- 00
- P0
- P1
- P3
- P4
- P6
- P8


In the following you will find the technical specifications of the displacement and pressure controllers for the CMV. These are subdivided into electric and hydraulic displacement controllers as well as pressure controllers or override signals. First get an overview of the basic specs, options and characteristics. Note the short designations such as „E2“ or „P0“. In the section Find Model Code & Availability, you can then check the availability of the corresponding controllers and compile your desired configuration using the short designations as a segment of the model code.

The displacement controller H4 is an hydraulic controller that enables stepless negative control (proportional to the applied pilot pressure) and default position $Vg_{max}$. In addition, one-sided or two-sided damping is optionally available. The control pressure supply operates with oil from the high-pressure circuit. Accordingly, for reliable functionality under all conditions, a minimum pressure must be ensured. If the working pressure level is too low for the control function, the required pressue can be connected to the port “G” from an outside pressure supply.

## Basic Specification

| | | | | | |
|---|---|---|---|---|---|
| Begin of control/ Default position | $Vg_{max}$/ Maximum torque/ Minimum speed | Control pressure (pst) | Minimum Setting | bar | 5 |
| | | | Maximum Setting | | 9 |
| End of control | $Vg_{min}$/ Minimum torque/ Maximum speed | Control pressure (pst) | Minimum Setting | | 15 |
| | | | Maximum Setting | | 19 |
| Reference | Reference pressure | | | | Case pressure |
| Limit | Maximum pilot pressure | | | bar | 50 |
| Control press. supply | Minimum pressure at work port A/B | | | bar | 30 |
| Threaded port | | | | | ISO 6149-1 M14x1.5 |

| | | | | | | | | | | |
|---|---|---|---|---|---|---|---|---|---|---|
| Damping | Nominal size | | | | 60 | 85 | 115 | 140 | 170 | 215 |
| | Approx. swiveling speed at 200 bar | Undamped | 1/4 $Vg_{max}$ -> $Vg_{max}$ | s | - | 0.15 | 0.2 | 0.2 | 0.3 | 0.5 |
| | | | $Vg_{max}$ -> 1/4 $Vg_{max}$ | | - | 0.15 | 0.2 | 0.2 | 0.3 | 0.5 |
| | | Damped | 1/4 $Vg_{max}$ -> $Vg_{max}$ | | - | 0.3 | 0.5 | 0.5 | 0.6 | 1.0 |
| | | | $Vg_{max}$ -> 1/4 $Vg_{max}$ | | - | 0.3 | 0.5 | 0.5 | 0.6 | 1.0 |

## Characteristic

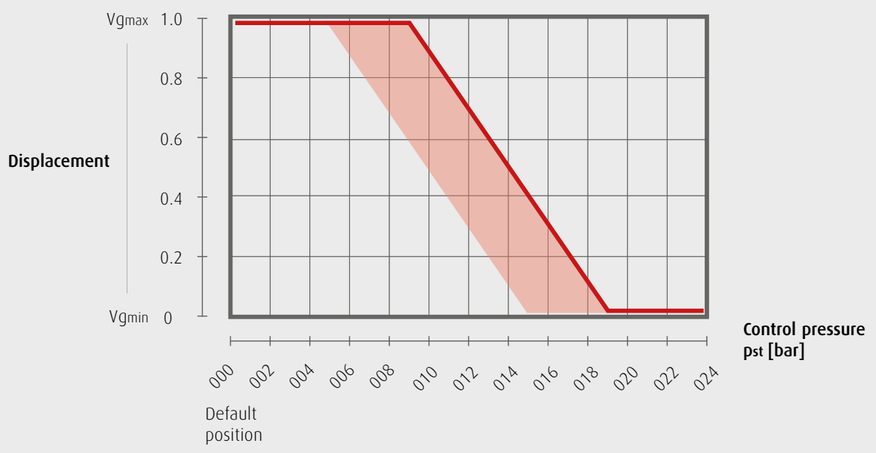


Displacement control is to be considered as a basic control function. If a combination with a pressure control function is applied, this overrides the displacement control within the corresponding control range.

Linde Hydraulics


OVERVIEW

Key Facts

CONFIGURATION

Modelcode & Availability

TECHNICAL SPECIFICATION

General Technical Data

Operating Parameters

Controls

Sensors

Electric Interfaces

Connectors

Mechanical Interfaces

Flanges

Shafts

Hydraulical Interfaces

Work Ports

Auxiliary Ports

Functions/Options

Displacement Control

Electrical Controller

00

E2

E4

E5

E6

Hydraulic Controller

H2

H4

H5

H6

Pressure Control/ Override

00

P0

P1

P3

P4

P6

P8


# Technical Specification | Controls | Displacement Controller | **H4**

In the following you will find the technical specifications of the displacement and pressure controllers for the CMV. These are subdivided into electric and hydraulic displacement controllers as well as pressure controllers or override signals. First get an overview of the basic specs, options and characteristics. Note the short designations such as „E2“ or „P0“. In the section Find Model Code & Availability, you can then check the availability of the corresponding controllers and compile your desired configuration using the short designations as a segment of the model code.

## Hydraulic Diagram (Configuration Examples)

Hydraulic diagram upon request

Hydraulic diagram upon request

Hydraulic diagram upon request

Hydraulic diagram upon request

# Technical Specification | Controls | Displacement Controller | **H5**


OVERVIEW
- Key Facts

CONFIGURATION
- Modelcode & Availability

TECHNICAL SPECIFICATION
- General Technical Data
- Operating Parameters
- Controls
- Sensors
- Electric Interfaces
  - Connectors
- Mechanical Interfaces
  - Flanges
  - Shafts
- Hydraulical Interfaces
  - Work Ports
  - Auxiliary Ports
- Functions/Options

Displacement Control
- Electrical Controller
  - 00
  - E2
  - E4
  - E5
  - E6
- Hydraulic Controller
  - H2
  - H4
  - H5
  - H6

Pressure Control/ Override
- 00
- P0
- P1
- P3
- P4
- P6
- P8


In the following you will find the technical specifications of the displacement and pressure controllers for the CMV. These are subdivided into electric and hydraulic displacement controllers as well as pressure controllers or override signals. First get an overview of the basic specs, options and characteristics. Note the short designations such as „E2“ or „P0“. In the section Find Model Code & Availability, you can then check the availability of the corresponding controllers and compile your desired configuration using the short designations as a segment of the model code.

The displacement controller H5 is an hydraulic controller that enables 2-point positive control and default position $Vg_{min}$. In addition, one-sided or two-sided damping is optionally available. The control pressure supply operates with oil from the high-pressure circuit. Accordingly, for reliable functionality under all conditions, a minimum pressure must be ensured. If the working pressure level is too low for the control function, the required pressue can be connected to the port “G” from an outside pressure supply.

## Basic Specification

| | | | | | |
|---|---|---|---|---|---|
| Begin of control/ Default position | $Vg_{min}$/ Minimum torque/ Maximum speed | Control pressure (pst) | | bar | Pilot port unpressurized |
| End of control | $Vg_{max}$/ Maximum torque/ Minimum speed | Control pressure (pst) | | bar | Pilot port pressurized (approx. from 20 to 40) |
| Reference | Reference pressure | | | bar | Case pressure |
| Limit | Maximum pilot pressure | | | bar | 50 |
| Control press. supply | Minimum pressure at work port A/B | | | bar | 30 |
| Threaded port | | | | | ISO 6149-1 M14x1.5 |

| | | | | | | | | | | |
|---|---|---|---|---|---|---|---|---|---|---|
| Damping | Nominal size | | | s | 60 | 85 | 115 | 140 | 170 | 215 |
| | Approx. swiveling speed at 200 bar | Undamped | 1/4 $Vg_{max}$ -> $Vg_{max}$ | | - | n.a. | n.a. | n.a. | n.a. | n.a. |
| | | | $Vg_{max}$ -> 1/4 $Vg_{max}$ | | - | n.a. | n.a. | n.a. | n.a. | n.a. |
| | | Damped | 1/4 $Vg_{max}$ -> $Vg_{max}$ | | - | n.a. | n.a. | n.a. | n.a. | n.a. |
| | | | $Vg_{max}$ -> 1/4 $Vg_{max}$ | | - | n.a. | n.a. | n.a. | n.a. | n.a. |

## Characteristic

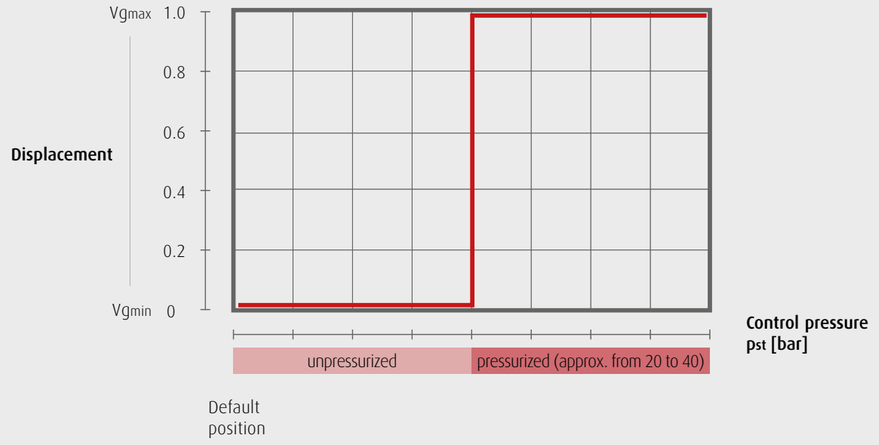


Displacement control is to be considered as a basic control function. If a combination with a pressure control function is applied, this overrides the displacement control within the corresponding control range.

# Technical Specification | Controls | Displacement Controller | **H5**


OVERVIEW
- Key Facts

CONFIGURATION
- Modelcode & Availability

TECHNICAL SPECIFICATION
- General Technical Data
- Operating Parameters
- Controls
- Sensors
- Electric Interfaces
  - Connectors
- Mechanical Interfaces
  - Flanges
  - Shafts
- Hydraulical Interfaces
  - Work Ports
  - Auxiliary Ports
- Functions/Options

Displacement Control
- Electrical Controller
  - 00
  - E2
  - E4
  - E5
  - E6
- Hydraulic Controller
  - H2
  - H4
  - H5
  - H6

Pressure Control/ Override
- 00
- P0
- P1
- P3
- P4
- P6
- P8


In the following you will find the technical specifications of the displacement and pressure controllers for the CMV. These are subdivided into electric and hydraulic displacement controllers as well as pressure controllers or override signals. First get an overview of the basic specs, options and characteristics. Note the short designations such as „E2“ or „P0“. In the section Find Model Code & Availability, you can then check the availability of the corresponding controllers and compile your desired configuration using the short designations as a segment of the model code.

## Hydraulic Diagram (Configuration Examples)

Hydraulic diagram upon request

Hydraulic diagram upon request

Hydraulic diagram upon request

Hydraulic diagram upon request

# Technical Specification | Controls | Displacement Controller | **H6**


OVERVIEW
- Key Facts

CONFIGURATION
- Modelcode & Availability

TECHNICAL SPECIFICATION
- General Technical Data
- Operating Parameters
- Controls
- Sensors
- Electric Interfaces
  - Connectors
- Mechanical Interfaces
  - Flanges
  - Shafts
- Hydraulical Interfaces
  - Work Ports
  - Auxiliary Ports
- Functions/Options

Displacement Control
- Electrical Controller
  - 00
  - E2
  - E4
  - E5
  - E6
- Hydraulic Controller
  - H2
  - H4
  - H5
  - H6

Pressure Control/ Override
- 00
- P0
- P1
- P3
- P4
- P6
- P8


In the following you will find the technical specifications of the displacement and pressure controllers for the CMV. These are subdivided into electric and hydraulic displacement controllers as well as pressure controllers or override signals. First get an overview of the basic specs, options and characteristics. Note the short designations such as „E2“ or „P0“. In the section Find Model Code & Availability, you can then check the availability of the corresponding controllers and compile your desired configuration using the short designations as a segment of the model code.

The displacement controller H6 is an hydraulic controller that enables stepless positive control (proportional to the applied pilot pressure) and default position $Vg_{min}$. In addition, one-sided or two-sided damping is optionally available. The control pressure supply operates with oil from the high-pressure circuit. Accordingly, for reliable functionality under all conditions, a minimum pressure must be ensured. If the working pressure level is too low for the control function, the required pressue can be connected to the port “G” from an outside pressure supply.

## Basic Specification

| | | | | | |
|---|---|---|---|---|---|
| Begin of control/ Default position | $Vg_{max}$/ Maximum torque/ Minimum speed | Control pressure (pst) | Minimum Setting | bar | 5 |
| | | | Maximum Setting | | 9 |
| End of control | $Vg_{min}$/ Minimum torque/ Maximum speed | Control pressure (pst) | Minimum Setting | | 15 |
| | | | Maximum Setting | | 19 |
| Reference | Reference pressure | | | | Case pressure |
| Limit | Maximum pilot pressure | | | bar | 50 |
| Control press. supply | Minimum pressure at work port A/B | | | bar | 30 |
| Threaded port | | | | | ISO 6149-1 M14x1.5 |

| | | | | | | | | | | |
|---|---|---|---|---|---|---|---|---|---|---|
| Damping | Nominal size | | | | 60 | 85 | 115 | 140 | 170 | 215 |
| | Approx. swiveling speed at 200 bar | Undamped | 1/4 $Vg_{max}$ -> $Vg_{max}$ | s | - | 0.15 | 0.2 | 0.2 | 0.3 | 0.5 |
| | | | $Vg_{max}$ -> 1/4 $Vg_{max}$ | | - | 0.15 | 0.2 | 0.2 | 0.3 | 0.5 |
| | | Damped | 1/4 $Vg_{max}$ -> $Vg_{max}$ | | - | 0.3 | 0.5 | 0.5 | 0.6 | 1.0 |
| | | | $Vg_{max}$ -> 1/4 $Vg_{max}$ | | - | 0.3 | 0.5 | 0.5 | 0.6 | 1.0 |

## Characteristic

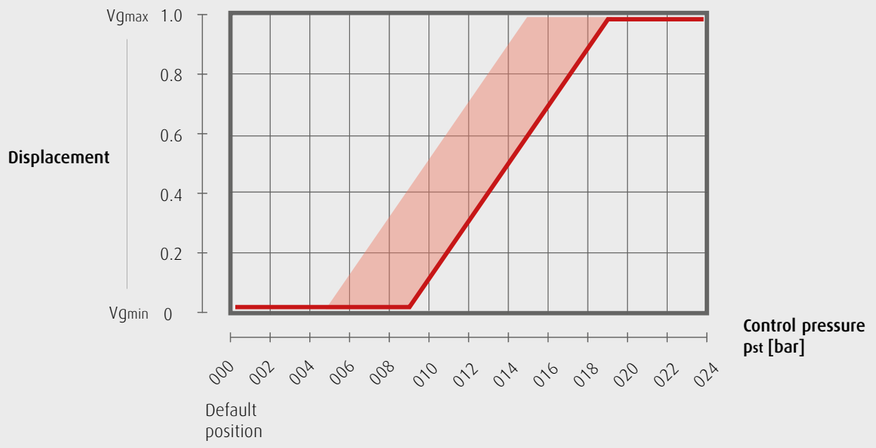


Displacement control is to be considered as a basic control function. If a combination with a pressure control function is applied, this overrides the displacement control within the corresponding control range.

Linde Hydraulics


OVERVIEW

Key Facts

CONFIGURATION

Modelcode & Availability

TECHNICAL SPECIFICATION

General Technical Data

Operating Parameters

Controls

Sensors

Electric Interfaces

Connectors

Mechanical Interfaces

Flanges

Shafts

Hydraulical Interfaces

Work Ports

Auxiliary Ports

Functions/Options

Displacement Control

Electrical Controller

00

E2

E4

E5

E6

Hydraulic Controller

H2

H4

H5

H6

Pressure Control/ Override

00

P0

P1

P3

P4

P6

P8


# Technical Specification | Controls | Displacement Controller | **H6**

In the following you will find the technical specifications of the displacement and pressure controllers for the CMV. These are subdivided into electric and hydraulic displacement controllers as well as pressure controllers or override signals. First get an overview of the basic specs, options and characteristics. Note the short designations such as „E2“ or „P0“. In the section Find Model Code & Availability, you can then check the availability of the corresponding controllers and compile your desired configuration using the short designations as a segment of the model code.

## Hydraulic Diagram (Configuration Examples)

Hydraulic diagram upon request

Hydraulic diagram upon request

Hydraulic diagram upon request

Hydraulic diagram upon request

# Technical Specification | Controls | Pressure Controller and/or Override Signal | **00**

In the following you will find the technical specifications of the displacement and pressure controllers for the CMV. These are subdivided into electric and hydraulic displacement controllers as well as pressure controllers or override signals. First get an overview of the basic specs, options and characteristics. Note the short designations such as „E2“ or „P0“. In the section Find Model Code & Availability, you can then check the availability of the corresponding controllers and compile your desired configuration using the short designations as a segment of the model code.

The pressure controller with the abbreviation „00“ is not an individual function. In this case, the component for diplacement and pressure control does not support pressure control. When choosing this option, a displacement controller must be considered to control the motor.

## Basic Specification

| | | | | | | |
|---|---|---|---|---|---|---|
| Basic setting | Begin of Control/ Default position | Vgmin/ Minimum Torque/ Maximum Speed | Control pressure (pHD) | Minimum Setting | bar | - |
| | | | | Maximum Setting | | - |
| | End of Control | Vgmax/ Maximum Torque/ Minimum Speed | Control pressure (pHD) | Minimum Setting | | - |
| | | | | Maximum Setting | | - |
| Reduction of pressure seting | Begin of Control | No reduction of the pressure setting/ Basic function is not affected | Pilot pr. pressure (pst) | | bar | - |
| | | | Control pr. pressure (pHD) | | | - |
| | End of Control | Max. reduction of the pressure setting/ Basic function is overriden | Pilot pr. pressure (pst) | | | - |
| | | | Control pr. pressure (pHD) | | | - |
| Increase of displacement | $Vg_{max}$ switch | | Solenoid unenergized | | | - |
| | | | Solenoid energized | | | - |
| | Control variable | | | | | - |
| | Control press. supply | Minimum pressure at work port A/B | | | bar | - |

| | | | | | | 60 | 85 | 115 | 140 | 170 | 215 |
|---|---|---|---|---|---|---|---|---|---|---|---|
| | Damping | Nominal size | | | | | | | | | |
| | | Swiveling speed at 200 bar | Undamped | 1/4 Vgmax -> Vgmax | s | - | - | - | - | - | - |
| | | | | Vgmax -> 1/4 Vgmax | | - | - | - | - | - | - |
| | | | Damped | 1/4 Vgmax -> Vgmax | | - | - | - | - | - | - |
| | | | | Vgmax -> 1/4 Vgmax | | - | - | - | - | - | - |

## Characteristic

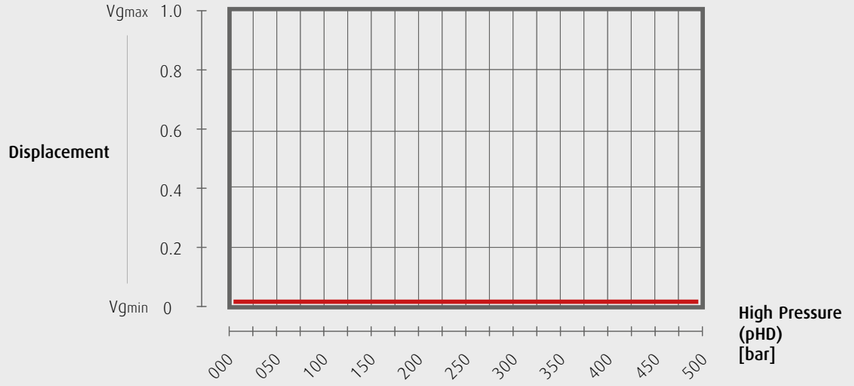


Pressure control is to be considered as an override function. If a combination with displacement control is applied, this function, also known as the basic control function, is overridden by pressure control within the corresponding control range.

OVERVIEW
Key Facts
CONFIGURATION
Modelcode & Availability
TECHNICAL SPECIFICATION
General Technical Data
Operating Parameters
Controls
Sensors
Electric Interfaces
Connectors
Mechanical Interfaces
Flanges
Shafts
Hydraulical Interfaces
Work Ports
Auxiliary Ports
Functions/Options
Displacement Control
Electrical Controller
00
E2
E4
E5
E6
Hydraulic Controller
H2
H4
H5
H6
Pressure Control/ Override
00
P0
P1
P3
P4
P6
P8

# Technical Specification | Controls | Pressure Controller and/or Override Signal | **00**

In the following you will find the technical specifications of the displacement and pressure controllers for the CMV. These are subdivided into electric and hydraulic displacement controllers as well as pressure controllers or override signals. First get an overview of the basic specs, options and characteristics. Note the short designations such as „E2“ or „P0“. In the section Find Model Code & Availability, you can then check the availability of the corresponding controllers and compile your desired configuration using the short designations as a segment of the model code.

## Hydraulic Diagram (Configuration Examples)

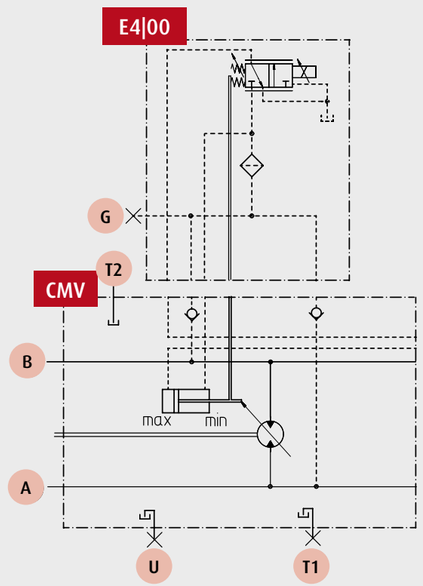


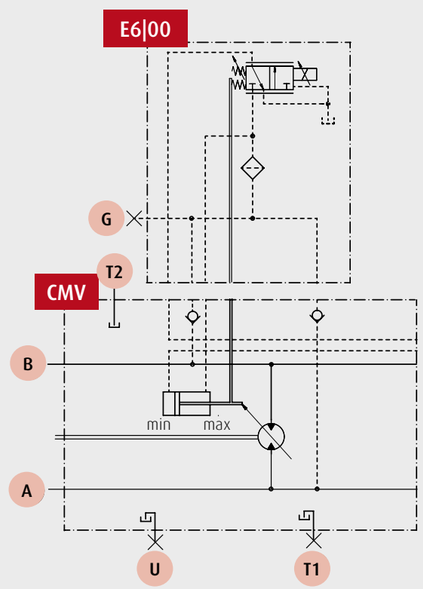


| | | | |
|---|---|---|---|
| CMV | Basic motor (without Controls/Functions/Options) | T1 | Drain/vent ports, ISO6149 |
| | | T2 | |
| A | High pressure work ports, ISO 6162-2 | U | Drain/vent port, ISO6149 |
| B | | | |

| | | | |
|---|---|---|---|
| E4\|00 | Displ. Contrl. E4 + Press. Contrl. 00 | | |
| E6\|00 | Displ. Contrl. E6 + Press. Contrl. 00 | | |
| G | External control pressure supply | | |
| | | | |

# Technical Specification | Controls | Pressure Controller and/or Override Signal | **P0**


OVERVIEW
- Key Facts

CONFIGURATION
- Modelcode & Availability

TECHNICAL SPECIFICATION
- General Technical Data
- Operating Parameters
- Controls
- Sensors
- Electric Interfaces
  - Connectors
- Mechanical Interfaces
  - Flanges
  - Shafts
- Hydraulical Interfaces
  - Work Ports
  - Auxiliary Ports
- Functions/Options

Displacement Control
- Electrical Controller
  - 00
  - E2
  - E4
  - E5
  - E6
- Hydraulic Controller
  - H2
  - H4
  - H5
  - H6

Pressure Control/ Override
- 00
- P0
- P1
- P3
- P4
- P6
- P8


In the following you will find the technical specifications of the displacement and pressure controllers for the CMV. These are subdivided into electric and hydraulic displacement controllers as well as pressure controllers or override signals. First get an overview of the basic specs, options and characteristics. Note the short designations such as „E2“ or „P0“. In the section Find Model Code & Availability, you can then check the availability of the corresponding controllers and compile your desired configuration using the short designations as a segment of the model code.

The pressure controller P0 enables self-regulating control depending on prevailing high-pressure level and default position $V_{g\,min}$ without any external signal. In addition, this pressure controller is basically one-sided damped. The control pressure supply operates with oil from the high-pressure circuit. Accordingly, for reliable functionality under all conditions, a minimum pressure must be ensured. If the working pressure level is too low for the control function, the required pressue can be connected to the port “G” from an outside pressure supply.

## Basic Specification

| | | | | | | |
|---|---|---|---|---|---|---|
| Basic setting | Begin of Control/ Default position | Vgmin/ Minimum Torque/ Maximum Speed | Control pressure (pHD) | Minimum Setting | bar | 80 |
| | | | | Maximum Setting | | 385 |
| | End of Control | Vgmax/ Maximum Torque/ Minimum Speed | Control pressure (pHD) | Minimum Setting | | 95 |
| | | | | Maximum Setting | | 400 |
| Reduction of pressure seting | Begin of Control | No reduction of the pressure setting/ Basic function is not affected | Pilot pr. pressure (pst) | | bar | n.a. |
| | | | Control pr. pressure (pHD) | | | n.a. |
| | End of Control | Max. reduction of the pressure setting/ Basic function is overriden | Pilot pr. pressure (pst) | | | n.a. |
| | | | Control pr. pressure (pHD) | | | n.a. |
| Increase of displacement | $V_{g\,max}$ switch | | Solenoid unenergized | | | n.a. |
| | | | Solenoid energized | | | n.a. |
| | Control variable | | | | | Work port A or B according to highest pressure value prevailing |
| | Control press. supply | Minimum pressure at work port A/B | | | bar | 30 |

| | | | | | | 000 | 050 | 100 | 150 | 200 | 250 | 300 | 350 | 400 | 450 | 500 |
|---|---|---|---|---|---|---|---|---|---|---|---|---|---|---|---|---|
| | Damping | Nominal size | | | | 60 | 85 | 115 | 140 | 170 | 215 | | | | | |
| | | Swiveling speed at 200 bar | Undamped | 1/4 Vgmax -> Vgmax | s | n.a. | n.a. | n.a. | n.a. | n.a. | n.a. | | | | | |
| | | | | Vgmax -> 1/4 Vgmax | | n.a. | n.a. | n.a. | n.a. | n.a. | n.a. | | | | | |
| | | | Damped | 1/4 Vgmax -> Vgmax | | upon request | upon request | upon request | upon request | upon request | upon request | | | | | |
| | | | | Vgmax -> 1/4 Vgmax | | n.a. | n.a. | n.a. | n.a. | n.a. | n.a. | | | | | |

## Characteristic

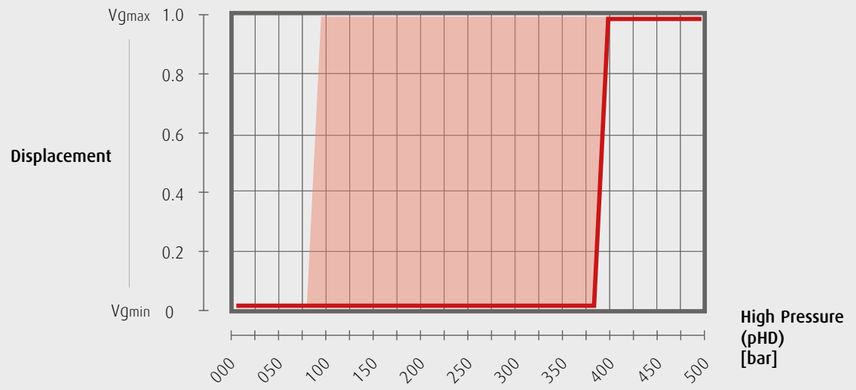


Pressure control is to be considered as an override function. If a combination with displacement control is applied, this function, also known as the basic control function, is overridden by pressure control within the corresponding control range.

OVERVIEW
Key Facts
CONFIGURATION
Modelcode & Availability
TECHNICAL SPECIFICATION
General Technical Data
Operating Parameters
Controls
Sensors
Electric Interfaces
Connectors
Mechanical Interfaces
Flanges
Shafts
Hydraulical Interfaces
Work Ports
Auxiliary Ports
Functions/Options
Displacement Control
Electrical Controller
00
E2
E4
E5
E6
Hydraulic Controller
H2
H4
H5
H6
Pressure Control/ Override
00
P0
P1
P3
P4
P6
P8

# Technical Specification | Controls | Pressure Controller and/or Override Signal | **P0**

In the following you will find the technical specifications of the displacement and pressure controllers for the CMV. These are subdivided into electric and hydraulic displacement controllers as well as pressure controllers or override signals. First get an overview of the basic specs, options and characteristics. Note the short designations such as „E2“ or „P0“. In the section Find Model Code & Availability, you can then check the availability of the corresponding controllers and compile your desired configuration using the short designations as a segment of the model code.

## Hydraulic Diagram (Configuration Examples)

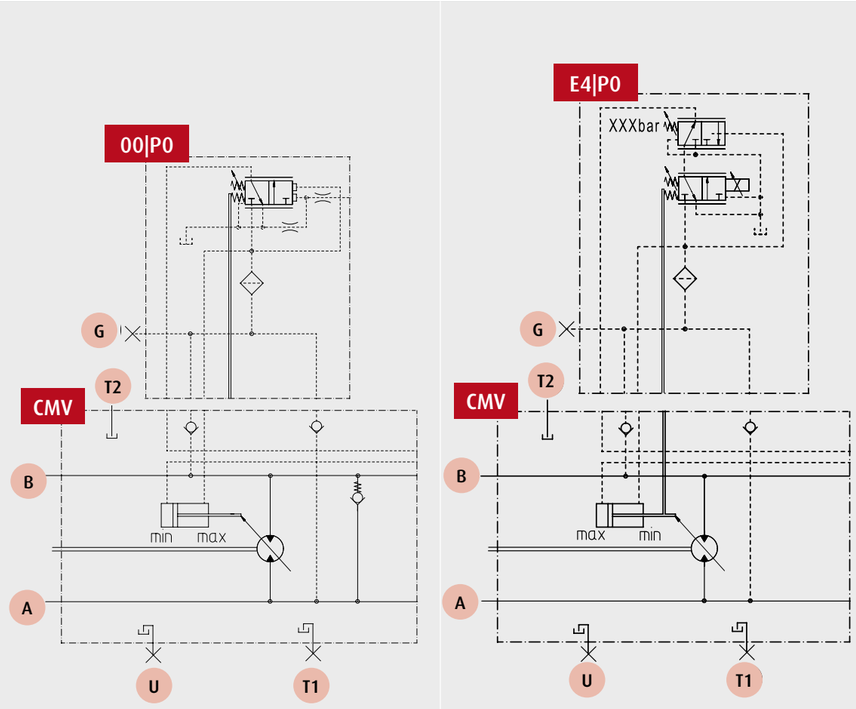


| | | | |
|---|---|---|---|
| CMV | Basic motor (without Controls/Functions/Options) | T1 | Drain/vent ports, ISO6149 |
| | | T2 | |
| A | High pressure work ports, ISO 6162-2 | U | Drain/vent port, ISO6149 |
| B | | | |

| | | | |
|---|---|---|---|
| 00P0 | Displ. Contrl. 00 + Press. Contrl. P0 | | |
| E4P0 | Displ. Contrl. E4 + Press. Contrl. P0 | | |
| G | External control pressure supply | | |
| | | | |

# Technical Specification | Controls | Pressure Controller and/or Override Signal | **P1**


OVERVIEW
- Key Facts

CONFIGURATION
- Modelcode & Availability

TECHNICAL SPECIFICATION
- General Technical Data
- Operating Parameters
- Controls
- Sensors
- Electric Interfaces
  - Connectors
- Mechanical Interfaces
  - Flanges
  - Shafts
- Hydraulical Interfaces
  - Work Ports
  - Auxiliary Ports
- Functions/Options

Displacement Control
- Electrical Controller
  - 00
  - E2
  - E4
  - E5
  - E6
- Hydraulic Controller
  - H2
  - H4
  - H5
  - H6

Pressure Control/ Override
- 00
- P0
- P1
- P3
- P4
- P6
- P8


In the following you will find the technical specifications of the displacement and pressure controllers for the CMV. These are subdivided into electric and hydraulic displacement controllers as well as pressure controllers or override signals. First get an overview of the basic specs, options and characteristics. Note the short designations such as „E2“ or „P0“. In the section Find Model Code & Availability, you can then check the availability of the corresponding controllers and compile your desired configuration using the short designations as a segment of the model code.

The pressure controller P1 enables self-regulating control depending on prevailing high-pressure level and default position $Vg_{min}$ without any external signal. In addition, this pressure controller is basically one-sided damped. The control pressure supply operates with oil from the high-pressure circuit. Accordingly, for reliable functionality under all conditions, a minimum pressure must be ensured. If the working pressure level is too low for the control function, the required pressue can be connected to the port “G” from an outside pressure supply. The difference between P0 and P1 is the gradient, with which the displacement changes as a function of rising work pressure.

## Basic Specification

| | | | | | | |
|---|---|---|---|---|---|---|
| Basic setting | Begin of Control/ Default position | Vgmin/ Minimum Torque/ Maximum Speed | Control pressure (pHD) | Minimum Setting | bar | 80 |
| | | | | Maximum Setting | | 400 |
| | End of Control | Vgmax/ Maximum Torque/ Minimum Speed | Control pressure (pHD) | Minimum Setting | | 170 |
| | | | | Maximum Setting | | 490 |
| Reduction of pressure seting | Begin of Control | No reduction of the pressure setting/ Basic function is not affected | Pilot pr. pressure (pst) | | bar | n.a. |
| | | | Control pr. pressure (pHD) | | | n.a. |
| | End of Control | Max. reduction of the pressure setting/ Basic function is overriden | Pilot pr. pressure (pst) | | | n.a. |
| | | | Control pr. pressure (pHD) | | | n.a. |
| Increase of displacement | $Vg_{max}$ switch | | Solenoid unenergized | | | n.a. |
| | | | Solenoid energized | | | n.a. |
| | Control variable | | | | | Work port A or B according to highest pressure value prevailing |
| | Control press. supply | Minimum pressure at work port A/B | | | bar | 30 |

| | | | | | | 60 | 85 | 115 | 140 | 170 | 215 |
|---|---|---|---|---|---|---|---|---|---|---|---|
| | Damping | Nominal size | | | | | | | | | |
| | | Swiveling speed at 200 bar | Undamped | 1/4 Vgmax -> Vgmax | s | n.a. | n.a. | n.a. | n.a. | n.a. | n.a. |
| | | | | Vgmax -> 1/4 Vgmax | | n.a. | n.a. | n.a. | n.a. | n.a. | n.a. |
| | | | Damped | 1/4 Vgmax -> Vgmax | | upon request | upon request | upon request | upon request | upon request | upon request |
| | | | | Vgmax -> 1/4 Vgmax | | n.a. | n.a. | n.a. | n.a. | n.a. | n.a. |

## Characteristic

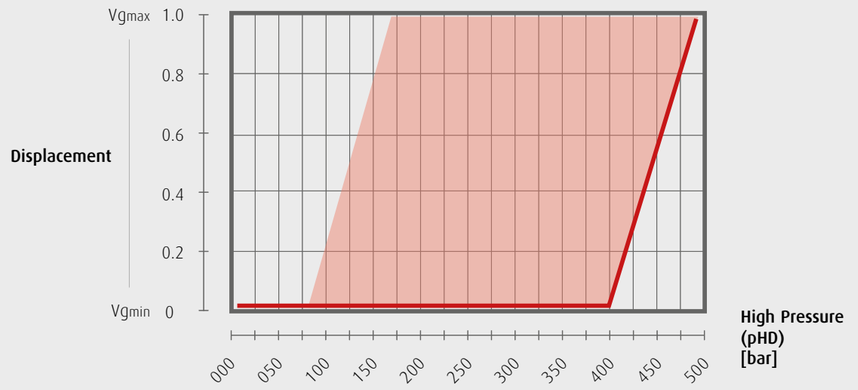


The difference between P0 and P1 is the gradient, with which the displacement changes as a function of rising work pressure. P0 has a pressure gain of about 10 to 15 bar from Vmin to Vmax, whereas P1 has a pressure gain of about 100 bar from Vmin to Vmax.

Pressure control is to be considered as an override function. If a combination with displacement control is applied, this function, also known as the basic control function, is overridden by pressure control within the corresponding control range.

Linde Hydraulics


OVERVIEW

Key Facts

CONFIGURATION

Modelcode & Availability

TECHNICAL SPECIFICATION

General Technical Data

Operating Parameters

Controls

Sensors

Electric Interfaces

Connectors

Mechanical Interfaces

Flanges

Shafts

Hydraulical Interfaces

Work Ports

Auxiliary Ports

Functions/Options

Displacement Control

Electrical Controller

00

E2

E4

E5

E6

Hydraulic Controller

H2

H4

H5

H6

Pressure Control/ Override

00

P0

P1

P3

P4

P6

P8


# Technical Specification | Controls | Pressure Controller and/or Override Signal | **P1**

In the following you will find the technical specifications of the displacement and pressure controllers for the CMV. These are subdivided into electric and hydraulic displacement controllers as well as pressure controllers or override signals. First get an overview of the basic specs, options and characteristics. Note the short designations such as „E2“ or „P0“. In the section Find Model Code & Availability, you can then check the availability of the corresponding controllers and compile your desired configuration using the short designations as a segment of the model code.

## Hydraulic Diagram (Configuration Examples)

Hydraulic diagram upon request

Hydraulic diagram upon request

Hydraulic diagram upon request

Hydraulic diagram upon request

# Technical Specification | Controls | Pressure Controller and/or Override Signal | **P3**

In the following you will find the technical specifications of the displacement and pressure controllers for the CMV. These are subdivided into electric and hydraulic displacement controllers as well as pressure controllers or override signals. First get an overview of the basic specs, options and characteristics. Note the short designations such as „E2“ or „P0“. In the section Find Model Code & Availability, you can then check the availability of the corresponding controllers and compile your desired configuration using the short designations as a segment of the model code.

The pressure controller P3 enables self-regulating control depending on prevailing high-pressure level and default position $V_{g\,min}$ without any external signal. According to the desired operating condition, the pressure setting can be reduced continuously via an external signal. In addition, this pressure controller is basically one-sided damped. The control pressure supply operates with oil from the high-pressure circuit. Accordingly, for reliable functionality under all conditions, a minimum pressure must be ensured. If the working pressure level is too low for the control function, the required pressue can be connected to the port “G” from an outside pressure supply.

## Basic Specification

| | | | | | | |
|---|---|---|---|---|---|---|
| Basic setting | Begin of Control/ Default position | Vgmin/ Minimum Torque/ Maximum Speed | Control pressure (pHD) | Minimum Setting | bar | 80 |
| | | | | Maximum Setting | | 400 |
| | End of Control | Vgmax/ Maximum Torque/ Minimum Speed | Control pressure (pHD) | Minimum Setting | | 95 |
| | | | | Maximum Setting | | 415 |
| Reduction of pressure setting | Begin of Control | No reduction of the pressure setting/ Basic function is not affected | Pilot pr. pressure (pst) | | bar | 0 |
| | | | Control pr. pressure (pHD) | | | according to basic setting |
| | End of Control | Max. reduction of the pressure setting/ Basic function is overriden | Pilot pr. pressure (pst) | | | 8 |
| | | | Control pr. pressure (pHD) | | | according to basic setting minus 176 |
| Increase of displacement | $V_{g\,max}$ switch | | Solenoid unenergized | | | na. |
| | | | Solenoid energized | | | n.a. |
| | Control variable | | | | | Work port A or B according to highest pressure value prevailing |
| | Control press. supply | Minimum pressure at work port A/B | | | bar | 30 |

| | | | | | | 60 | 85 | 115 | 140 | 170 | 215 |
|---|---|---|---|---|---|---|---|---|---|---|---|
| | Damping | Nominal size | | | | | | | | | |
| | | Swiveling speed at 200 bar | Undamped | 1/4 Vgmax -> Vgmax | s | n.a. | n.a. | n.a. | n.a. | n.a. | n.a. |
| | | | | Vgmax -> 1/4 Vgmax | | n.a. | n.a. | n.a. | n.a. | n.a. | n.a. |
| | | | Damped | 1/4 Vgmax -> Vgmax | | upon request | upon request | upon request | upon request | upon request | upon request |
| | | | | Vgmax -> 1/4 Vgmax | | n.a. | n.a. | n.a. | n.a. | n.a. | n.a. |

## Characteristic

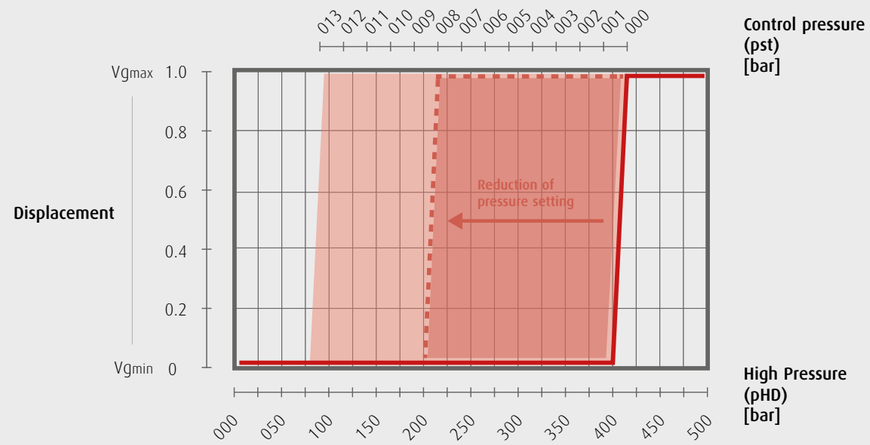


Pressure control is to be considered as an override function. If a combination with displacement control is applied, this function, also known as the basic control function, is overridden by pressure control within the corresponding control range.

OVERVIEW
Key Facts
CONFIGURATION
Modelcode & Availability
TECHNICAL SPECIFICATION
General Technical Data
Operating Parameters
Controls
Sensors
Electric Interfaces
Connectors
Mechanical Interfaces
Flanges
Shafts
Hydraulical Interfaces
Work Ports
Auxiliary Ports
Functions/Options
Displacement Control
Electrical Controller
00
E2
E4
E5
E6
Hydraulic Controller
H2
H4
H5
H6
Pressure Control/ Override
00
P0
P1
P3
P4
P6
P8

# Technical Specification | Controls | Pressure Controller and/or Override Signal | **P3**

In the following you will find the technical specifications of the displacement and pressure controllers for the CMV. These are subdivided into electric and hydraulic displacement controllers as well as pressure controllers or override signals. First get an overview of the basic specs, options and characteristics. Note the short designations such as „E2“ or „P0“. In the section Find Model Code & Availability, you can then check the availability of the corresponding controllers and compile your desired configuration using the short designations as a segment of the model code.

## Hydraulic Diagram (Configuration Examples)

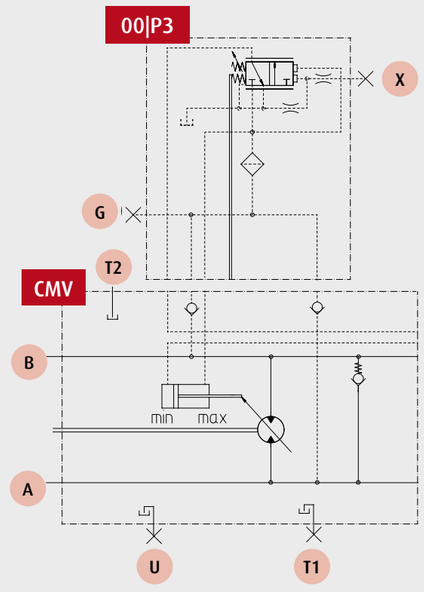


| | | | |
|---|---|---|---|
| CMV | Basic motor (without Controls/Functions/Options) | T1 | Drain/vent ports, ISO6149 |
| | | T2 | |
| A | High pressure work ports, ISO 6162-2 | U | Drain/vent port, ISO6149 |
| B | | | |

| | | | |
|---|---|---|---|
| 00P3 | Displ. Contrl. 00 + Press. Contrl. P3 | | |
| G | External control pressure supply | | |
| X | Pilot pressure to reduce pressure setting | | |
| | | | |

# Technical Specification | Controls | Pressure Controller and/or Override Signal | **P4**


OVERVIEW
- Key Facts

CONFIGURATION
- Modelcode & Availability

TECHNICAL SPECIFICATION
- General Technical Data
- Operating Parameters
- Controls
- Sensors
- Electric Interfaces
  - Connectors
- Mechanical Interfaces
  - Flanges
  - Shafts
- Hydraulical Interfaces
  - Work Ports
  - Auxiliary Ports
- Functions/Options

Displacement Control
- Electrical Controller
  - 00
  - E2
  - E4
  - E5
  - E6
- Hydraulic Controller
  - H2
  - H4
  - H5
  - H6

Pressure Control/ Override
- 00
- P0
- P1
- P3
- P4
- P6
- P8


In the following you will find the technical specifications of the displacement and pressure controllers for the CMV. These are subdivided into electric and hydraulic displacement controllers as well as pressure controllers or override signals. First get an overview of the basic specs, options and characteristics. Note the short designations such as „E2“ or „P0“. In the section Find Model Code & Availability, you can then check the availability of the corresponding controllers and compile your desired configuration using the short designations as a segment of the model code.

The pressure controller P4 enables self-regulating control depending on prevailing high-pressure level and default position $Vg_{min}$ without any external signal. Independently of the basic setting, the pressure controller can be overridden so that the motor sviwels to $Vg_{min}$ - depending on the pressure side. In addition, this pressure controller is basically one-sided damped. The control pressure supply operates with oil from the high-pressure circuit. Accordingly, for reliable functionality under all conditions, a minimum pressure must be ensured. If the working pressure level is too low for the control function, the required pressue can be connected to the port “G” from an outside pressure supply.

## Basic Specification

| | | | | | | |
|---|---|---|---|---|---|---|
| Basic setting | Begin of Control/ Default position | Vgmin/ Minimum Torque/ Maximum Speed | Control pressure (pHD) | Minimum Setting | bar | 80 |
| | | | | Maximum Setting | | 400 |
| | End of Control | Vgmax/ Maximum Torque/ Minimum Speed | Control pressure (pHD) | Minimum Setting | | 95 |
| | | | | Maximum Setting | | 415 |
| Deactivating of pressure control | Pressure side selection | Work port A pressurized/ direction of rotation: counterclockwise | Solenoid unenergized | | | Pressure control activated/ Motor remains at Vgmin |
| | | | Solenoid energized | | | Pressure control deactivated |
| | | Work port B pressurized/ direction of rotation: counterclockwise | Solenoid unenergized | | | Pressure control deactivated |
| | | | Solenoid energized | | | Pressure control activated/ Motor remains at Vgmin |
| Increase of displacement | $Vg_{max}$ switch | | Solenoid unenergized | | | n.a. |
| | | | Solenoid energized | | | n.a. |
| | Control variable | | | | | Work port A or B according to pressure side selection |
| | Control press. supply | Minimum pressure at work port A/B | | | bar | 30 |

| | | | | | | | | | | | |
|---|---|---|---|---|---|---|---|---|---|---|---|
| | Damping | Nominal size | | | | 60 | 85 | 115 | 140 | 170 | 215 |
| | | Swiveling speed at 200 bar | Undamped | 1/4 Vgmax -> Vgmax | s | n.a. | n.a. | n.a. | n.a. | n.a. | n.a. |
| | | | | Vgmax -> 1/4 Vgmax | | n.a. | n.a. | n.a. | n.a. | n.a. | n.a. |
| | | | Damped | 1/4 Vgmax -> Vgmax | | upon request | upon request | upon request | upon request | upon request | upon request |
| | | | | Vgmax -> 1/4 Vgmax | | n.a. | n.a. | n.a. | n.a. | n.a. | n.a. |

## Characteristic

This controller provides the feature to define side selection for the pressure signal reaching the pressure controller. This feature is i.e. to be selected, when the application can generate a high pressure during decelleration, like in drive applications or during downhill driving.

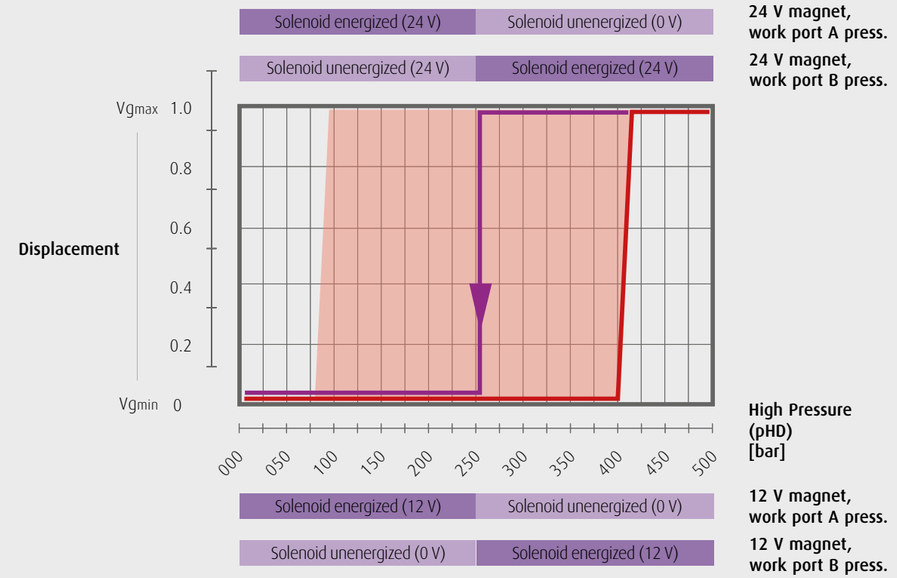


Pressure control is to be considered as an override function. If a combination with displacement control is applied, this function, also known as the basic control function, is overridden by pressure control within the corresponding control range.

# Technical Specification | Controls | Pressure Controller and/or Override Signal | **P4**


OVERVIEW
- Key Facts

CONFIGURATION
- Modelcode & Availability

TECHNICAL SPECIFICATION
- General Technical Data
- Operating Parameters
- Controls
- Sensors
- Electric Interfaces
  - Connectors
- Mechanical Interfaces
  - Flanges
  - Shafts
- Hydraulical Interfaces
  - Work Ports
  - Auxiliary Ports
- Functions/Options

Displacement Control
- Electrical Controller
  - 00
  - E2
  - E4
  - E5
  - E6
- Hydraulic Controller
  - H2
  - H4
  - H5
  - H6

Pressure Control/ Override
- 00
- P0
- P1
- P3
- P4
- P6
- P8


In the following you will find the technical specifications of the displacement and pressure controllers for the CMV. These are subdivided into electric and hydraulic displacement controllers as well as pressure controllers or override signals. First get an overview of the basic specs, options and characteristics. Note the short designations such as „E2“ or „P0“. In the section Find Model Code & Availability, you can then check the availability of the corresponding controllers and compile your desired configuration using the short designations as a segment of the model code.

| Hydraulic Diagram (Configuration Examples) | | | |
|---|---|---|---|
| Hydraulic diagram upon request | Hydraulic diagram upon request | Hydraulic diagram upon request | Hydraulic diagram upon request |

# Technical Specification | Controls | Pressure Controller and/or Override Signal | **P6**


OVERVIEW
- Key Facts

CONFIGURATION
- Modelcode & Availability

TECHNICAL SPECIFICATION
- General Technical Data
- Operating Parameters
- Controls
- Sensors
- Electric Interfaces
  - Connectors
- Mechanical Interfaces
  - Flanges
  - Shafts
- Hydraulical Interfaces
  - Work Ports
  - Auxiliary Ports
- Functions/Options

Displacement Control
- Electrical Controller
  - 00
  - E2
  - E4
  - E5
  - E6
- Hydraulic Controller
  - H2
  - H4
  - H5
  - H6

Pressure Control/ Override
- 00
- P0
- P1
- P3
- P4
- P6
- P8


In the following you will find the technical specifications of the displacement and pressure controllers for the CMV. These are subdivided into electric and hydraulic displacement controllers as well as pressure controllers or override signals. First get an overview of the basic specs, options and characteristics. Note the short designations such as „E2“ or „P0“. In the section Find Model Code & Availability, you can then check the availability of the corresponding controllers and compile your desired configuration using the short designations as a segment of the model code.

The pressure controller P6 enables self-regulating control depending on prevailing high-pressure level and default position $Vg_{min}$ without any external signal. Independently of the basic setting, the pressure controller can be overridden so that the motor sviwels to $Vg_{max}$ or, depending on the pressure side, to $Vg_{min}$. In addition, this pressure controller is basically one-sided damped. The control pressure supply operates with oil from the high-pressure circuit. Accordingly, for reliable functionality under all conditions, a minimum pressure must be ensured. If the working pressure level is too low for the control function, the required pressue can be connected to the port “G” from an outside pressure supply.

## Basic Specification

| | | | | | | |
|---|---|---|---|---|---|---|
| Basic setting | Begin of Control/ Default position | Vgmin/ Minimum Torque/ Maximum Speed | Control pressure (pHD) | Minimum Setting | bar | 80 |
| | | | | Maximum Setting | | 400 |
| | End of Control | Vgmax/ Maximum Torque/ Minimum Speed | Control pressure (pHD) | Minimum Setting | | 95 |
| | | | | Maximum Setting | | 415 |
| Deactivating of pressure control | Pressure side selection | Work port A pressurized/ direction of rotation: counterclockwise | Solenoid unenergized | | | Pressure control activated/ Motor remains at Vgmin |
| | | | Solenoid energized | | | Pressure control deactivated |
| | | Work port B pressurized/ direction of rotation: counterclockwise | Solenoid unenergized | | | Pressure control deactivated |
| | | | Solenoid energized | | | Pressure control activated/ Motor remains at Vgmin |
| Increase of displacement | $Vg_{max}$ switch | | Solenoid unenergized | | | according to basic setting |
| | | | Solenoid energized | | | Vgmax |
| | Control variable | | | | | Work port A or B according to pressure side selection |
| | Control press. supply | Minimum pressure at work port A/B | | | bar | 30 |

| | | | | | | | | | | | |
|---|---|---|---|---|---|---|---|---|---|---|---|
| | Nominal size | | | | | 60 | 85 | 115 | 140 | 170 | 215 |
| | Damping | Swiveling speed at 200 bar | Undamped | 1/4 Vgmax -> Vgmax | s | n.a. | n.a. | n.a. | n.a. | n.a. | n.a. |
| | | | | Vgmax -> 1/4 Vgmax | | n.a. | n.a. | n.a. | n.a. | n.a. | n.a. |
| | | | Damped | 1/4 Vgmax -> Vgmax | | upon request | upon request | upon request | upon request | upon request | upon request |
| | | | | Vgmax -> 1/4 Vgmax | | n.a. | n.a. | n.a. | n.a. | n.a. | n.a. |

## Characteristic

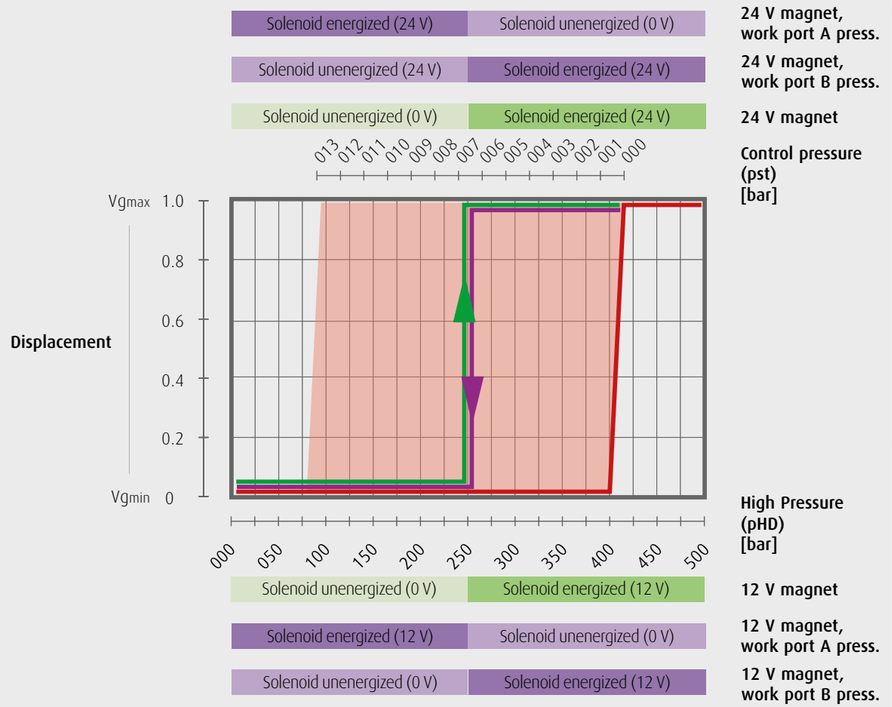


Pressure control is to be considered as an override function. If a combination with displacement control is applied, this function, also known as the basic control function, is overridden by pressure control within the corresponding control range.

# Technical Specification | Controls | Pressure Controller and/or Override Signal | **P6**


OVERVIEW
- Key Facts

CONFIGURATION
- Modelcode & Availability

TECHNICAL SPECIFICATION
- General Technical Data
- Operating Parameters
- Controls
- Sensors
- Electric Interfaces
  - Connectors
- Mechanical Interfaces
  - Flanges
  - Shafts
- Hydraulical Interfaces
  - Work Ports
  - Auxiliary Ports
- Functions/Options

Displacement Control
- Electrical Controller
  - 00
  - E2
  - E4
  - E5
  - E6
- Hydraulic Controller
  - H2
  - H4
  - H5
  - H6

Pressure Control/ Override
- 00
- P0
- P1
- P3
- P4
- P6
- P8


In the following you will find the technical specifications of the displacement and pressure controllers for the CMV. These are subdivided into electric and hydraulic displacement controllers as well as pressure controllers or override signals. First get an overview of the basic specs, options and characteristics. Note the short designations such as „E2“ or „P0“. In the section Find Model Code & Availability, you can then check the availability of the corresponding controllers and compile your desired configuration using the short designations as a segment of the model code.

## Hydraulic Diagram (Configuration Examples)

Hydraulic diagram upon request

Hydraulic diagram upon request

Hydraulic diagram upon request

Hydraulic diagram upon request

# Technical Specification | Controls | Pressure Controller and/or Override Signal | **P8**


OVERVIEW
- Key Facts

CONFIGURATION
- Modelcode & Availability

TECHNICAL SPECIFICATION
- General Technical Data
- Operating Parameters
- Controls
- Sensors
- Electric Interfaces
  - Connectors
- Mechanical Interfaces
  - Flanges
  - Shafts
- Hydraulical Interfaces
  - Work Ports
  - Auxiliary Ports
- Functions/Options

Displacement Control
- Electrical Controller
  - 00
  - E2
  - E4
  - E5
  - E6
- Hydraulic Controller
  - H2
  - H4
  - H5
  - H6

Pressure Control/ Override
- 00
- P0
- P1
- P3
- P4
- P6
- P8


In the following you will find the technical specifications of the displacement and pressure controllers for the CMV. These are subdivided into electric and hydraulic displacement controllers as well as pressure controllers or override signals. First get an overview of the basic specs, options and characteristics. Note the short designations such as „E2“ or „P0“. In the section Find Model Code & Availability, you can then check the availability of the corresponding controllers and compile your desired configuration using the short designations as a segment of the model code.

The pressure controller P8 enables self-regulating control depending on prevailing high-pressure level and default position $V_{g\,min}$ without any external signal. According to the desired operating condition, the pressure setting can be reduced continuously via an external signal. In addition, this pressure controller is basically one-sided damped. The control pressure supply operates with oil from the high-pressure circuit. Accordingly, for reliable functionality under all conditions, a minimum pressure must be ensured. If the working pressure level is too low for the control function, the required pressue can be connected to the port “G” from an outside pressure supply.

## Basic Specification

| | | | | | | |
|---|---|---|---|---|---|---|
| Basic setting | Begin of Control/ Default position | Vgmin/ Minimum Torque/ Maximum Speed | Control pressure (pHD) | Minimum Setting | bar | 80 |
| | | | | Maximum Setting | | 400 |
| | End of Control | Vgmax/ Maximum Torque/ Minimum Speed | Control pressure (pHD) | Minimum Setting | | 170 |
| | | | | Maximum Setting | | 490 |
| Reduction of pressure setting | Begin of Control | No reduction of the pressure setting/ Basic function is not affected | Pilot pr. pressure (pst) | | bar | 0 |
| | | | Control pr. pressure (pHD) | | | according to basic setting |
| | End of Control | Max. reduction of the pressure setting/ Basic function is overriden | Pilot pr. pressure (pst) | | | 8 |
| | | | Control pr. pressure (pHD) | | | according to basic setting minus 176 |
| Increase of displacement | $V_{g\,max}$ switch | | Solenoid unenergized | | | na. |
| | | | Solenoid energized | | | n.a. |
| | Control variable | | | | | Work port A or B according to highest pressure value prevailing |
| | Control press. supply | Minimum pressure at work port A/B | | | bar | 30 |

| | | | | | | | | | | | |
|---|---|---|---|---|---|---|---|---|---|---|---|
| | Damping | Nominal size | | | | 60 | 85 | 115 | 140 | 170 | 215 |
| | | Swiveling speed at 200 bar | Undamped | 1/4 Vgmax -> Vgmax | s | n.a. | n.a. | n.a. | n.a. | n.a. | n.a. |
| | | | | Vgmax -> 1/4 Vgmax | | n.a. | n.a. | n.a. | n.a. | n.a. | n.a. |
| | | | Damped | 1/4 Vgmax -> Vgmax | | upon request | upon request | upon request | upon request | upon request | upon request |
| | | | | Vgmax -> 1/4 Vgmax | | n.a. | n.a. | n.a. | n.a. | n.a. | n.a. |

## Characteristic

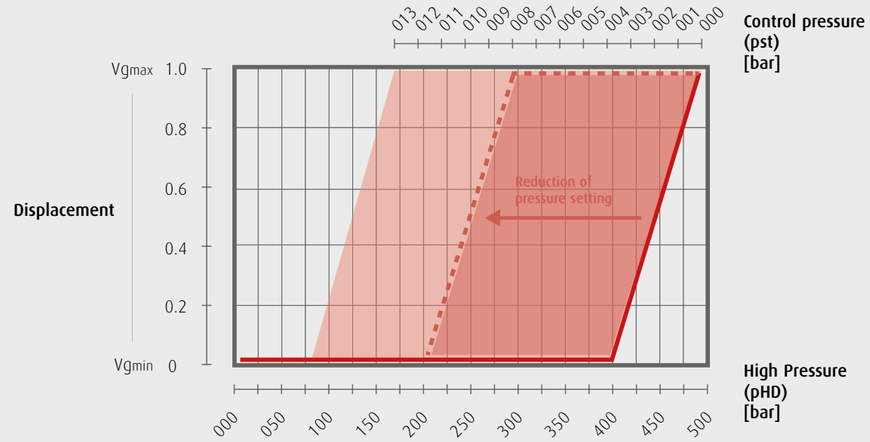


Pressure control is to be considered as an override function. If a combination with displacement control is applied, this function, also known as the basic control function, is overridden by pressure control within the corresponding control range.

# Technical Specification | Controls | Pressure Controller and/or Override Signal | **P8**


OVERVIEW
- Key Facts

CONFIGURATION
- Modelcode & Availability

TECHNICAL SPECIFICATION
- General Technical Data
- Operating Parameters
- Controls
- Sensors
- Electric Interfaces
  - Connectors
- Mechanical Interfaces
  - Flanges
  - Shafts
- Hydraulical Interfaces
  - Work Ports
  - Auxiliary Ports
- Functions/Options

Displacement Control
- Electrical Controller
  - 00
  - E2
  - E4
  - E5
  - E6
- Hydraulic Controller
  - H2
  - H4
  - H5
  - H6

Pressure Control/ Override
- 00
- P0
- P1
- P3
- P4
- P6
- P8


In the following you will find the technical specifications of the displacement and pressure controllers for the CMV. These are subdivided into electric and hydraulic displacement controllers as well as pressure controllers or override signals. First get an overview of the basic specs, options and characteristics. Note the short designations such as „E2“ or „P0“. In the section Find Model Code & Availability, you can then check the availability of the corresponding controllers and compile your desired configuration using the short designations as a segment of the model code.

## Hydraulic Diagram (Configuration Examples)

Hydraulic diagram upon request

Hydraulic diagram upon request

Hydraulic diagram upon request

Hydraulic diagram upon request

OVERVIEW
Key Facts
CONFIGURATION
Modelcode & Availability
TECHNICAL SPECIFICATION
General Technical Data
Operating Parameters
Controls
Sensors
Electric Interfaces
Connectors
Mechanical Interfaces
Flanges
Shafts
Hydraulical Interfaces
Work Ports
Auxiliary Ports
Functions/Options
Speed & Direction

# Technical Specification | Sensors | **Speed & Direction**

In the following you will find the technical specifications of the sensors for the CMV. First get an overview of the specification. In the section Find Model Code & Availability, you can then check the availability of the sensor and compile your desired configuration using the short designations as a segment of the model code.

The sensor for speed and direction of rotation is located in the housing of the CMV and picks up the frequency signal from a increment ring on the drive shaft. It is available as an option. If no speed sensor is desired, but the possibility for subsequent installation exists, the drive shaft is supplied with increments and the installation opening is provided with a blind plate.

**Basic Specification**

| | | | | | | | | | |
|---|---|---|---|---|---|---|---|---|---|
| Sensor type | | | | Hall | | | | | |
| Signal output | | | | NPN | | | | | |
| Voltage | | | V | 7.0...32.0 | | | | | |
| Protection class | | | | See connector | | | | | |
| | | | | | | | | | |
| | | | | | | | | | |
| Impulses | | Nominal size | | 60 | 85 | 115 | 140 | 170 | 215 |
| | | Impulses per rev | | 54 | 58 | 65 | 70 | 74 | 80 |
| | | | | - | - | - | - | - | - |
| | | | | - | - | - | - | - | - |

**Characteristic**

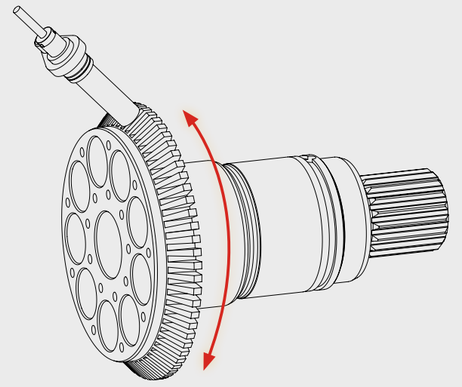

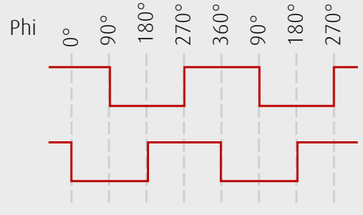

OVERVIEW
Key Facts
CONFIGURATION
Modelcode & Availability
TECHNICAL SPECIFICATION
General Technical Data
Operating Parameters
Controls
Sensors
Electric Interfaces
Connectors
Mechanical Interfaces
Flanges
Shafts
Hydraulical Interfaces
Work Ports
Auxiliary Ports
Functions/Options
Speed & Direction

# Technical Specification | Sensors | **Speed & Direction**

In the following you will find the technical specifications of the sensors for the CMV. First get an overview of the specification. In the section Find Model Code & Availability, you can then check the availability of the sensor and compile your desired configuration using the short designations as a segment of the model code.

## Electric Diagram (Configuration Examples)

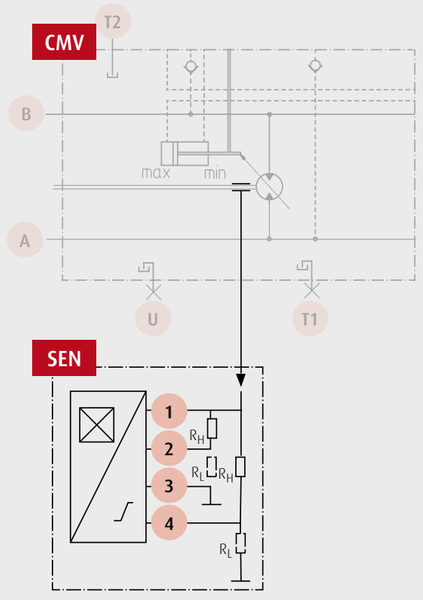


| | | | |
|---|---|---|---|
| CMV | Basic motor (without Controls/Functions/Options) | 1 | $V_B$ + (7...32 V) |
| SEN | Sensor speed & direction of rotation | 2 | Channel A |
| | | 3 | Ground (GND) |
| | | 4 | Channel B |

# Technical Specification | Sensors | **Speed & Direction**


OVERVIEW
- Key Facts

CONFIGURATION
- Modelcode & Availability

TECHNICAL SPECIFICATION
- General Technical Data
- Operating Parameters
- Controls
- Sensors
- Electric Interfaces
  - Connectors
- Mechanical Interfaces
  - Flanges
  - Shafts
- Hydraulical Interfaces
  - Work Ports
  - Auxiliary Ports
- Functions/Options

Speed & Direction


In the following you will find the technical specifications of the sensors for the CMV. First get an overview of the specification. In the section Find Model Code & Availability, you can then check the availability of the sensor and compile your desired configuration using the short designations as a segment of the model code.

## Dimensions - Side view

**SEN**

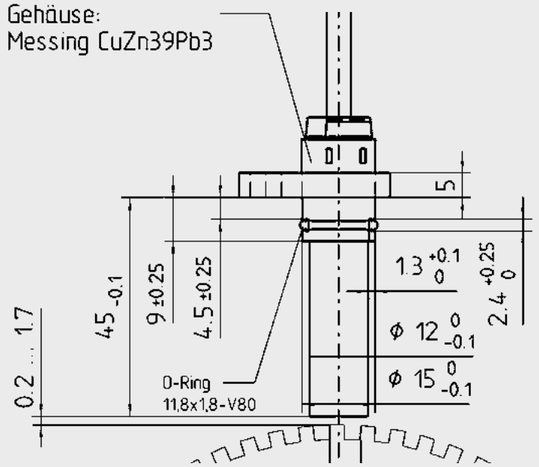


| | | | | | | | |
|---|---|---|---|---|---|---|---|
| SEN | Sensor speed & direction of rotation | | | | | | |
| | | | | | | | |
| | | | | | | | |
| | | | | | | | |

# Technical Specification | Connectors | **D - Deutsch**

In the following you will find the technical specifications of the connectors for the CMV. First get an overview of the specification. Note the short designations such as „D“ or „A“. In the section Model Code & Availability, you can then check the availability of the sensor and compile your desired configuration using the short designations as a segment of the model code.

## Dimensions & Pin layout - Sensors

DEU

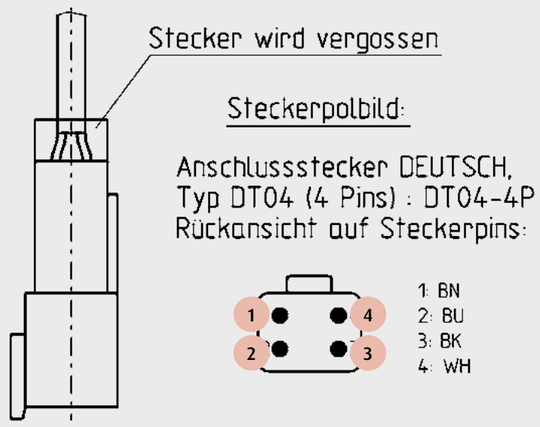


| | | | |
|---|---|---|---|
| DEU | Deutsch Connector,<br>Enclosure class IP69K,<br>E1 marking available | 1 | $V_B$ + (7...32V) |
| | | 2 | Channel A |
| | | 3 | Ground (GND) |
| | | 4 | Channel B |

## Dimensions & Pin layout - Solenoids (porportional/switched)

DEU

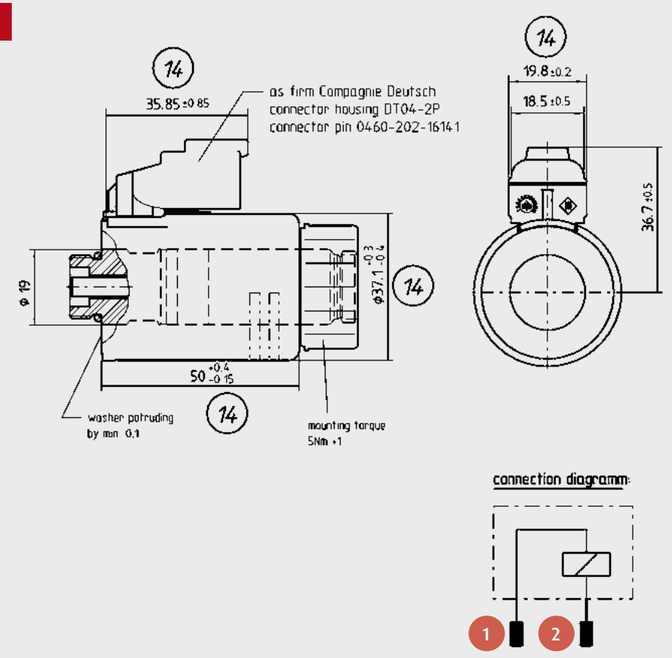


| | | | |
|---|---|---|---|
| DEU | Deutsch Connector,<br>Enclosure class IP69K,<br>E1 marking available | 1 | $V_B$ + (7...32V) / Switched ground |
| | | 2 | Switched ground / $V_B$ + (7...32V) |
| | | 3 | |
| | | | |

# Technical Specification | Connectors | **A - AMP Junior Timer**

In the following you will find the technical specifications of the connectors for the CMV. First get an overview of the specification. Note the short designations such as „D“ or „A“. In the section Model Code & Availability, you can then check the availability of the sensor and compile your desired configuration using the short designations as a segment of the model code.

## Dimensions & Pin layout - Sensors

AMP

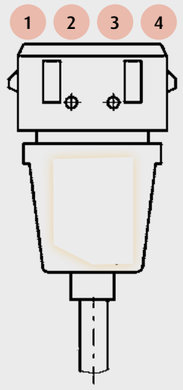


| | | | |
|---|---|---|---|
| AMP | AMP Junior Timer Connector,<br>Enclosure class IP69K,<br>E1 marking available | 1 | $V_B$ + (7...32V) |
| | | 2 | Channel A |
| | | 3 | Ground (GND) |
| | | 4 | Channel B |

## Dimensions & Pin layout - Solenoids (porportional/switched)

AMP

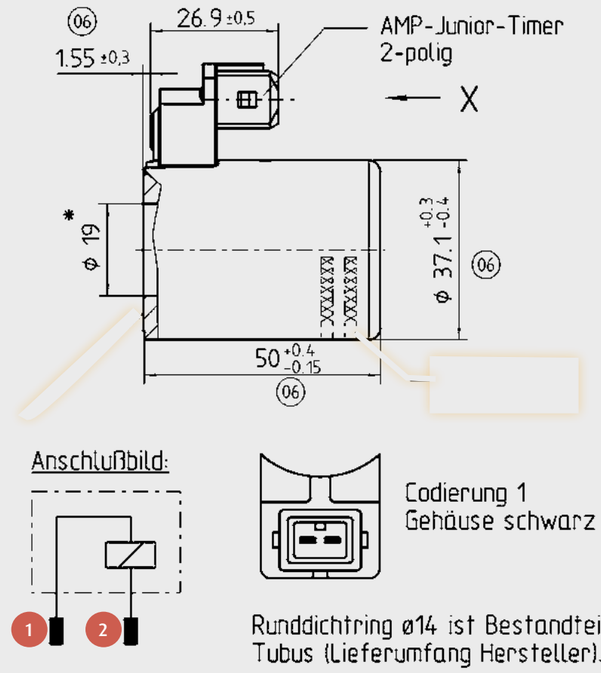


| | | | |
|---|---|---|---|
| AMP | AMP Junior Timer Connector,<br>Enclosure class IP69K,<br>E1 marking available | 1 | $V_B$ + (7...32V) / Switched ground |
| | | 2 | Switched ground / $V_B$ + (7...32V) |
| | | 3 | |
| | | | |

# Technical Specification | Mounting Flanges Auxiliary Ports | ISO 3019-1/SAE J744 | **C4/CMV60**


OVERVIEW
- Key Facts

CONFIGURATION
- Modelcode & Availability

TECHNICAL SPECIFICATION
- General Technical Data
- Operating Parameters
- Controls
- Sensors
- Electric Interfaces
  - Connectors
- Mechanical Interfaces
  - Flanges
  - Shafts
- Hydraulical Interfaces
  - Work Ports
  - Auxiliary Ports
- Functions/Options

ISO 3019-1/ SAE J744
- C4 / CMV 60
- C2 / CMV 85
- D4 / CMV 115
- D4 / CMV 140
- D4 / CMV 170
- E4 / CMV 215

ISO 3019-2 metric
- M4 / CMV 60
- N4 / CMV 85
- P4 / CMV 115
- R4 / CMV 140
- R4 / CMV 170
- S4 / CMV 215

Plug-in, similar to ISO 3019-2
- P2 / CMV 60
- Y2 / CMV 85
- S2 / CMV 115
- S2 / CMV 140
- S2 / CMV 170
- Z4 / CMV 215


In the following you will find the technical specifications of the mounting flanges and auxiliary ports. They are clustered according to the standard and nominal sizes. First get an overview of the dimensions. Note the short designations such as „C4“ or „E4“. In the section [Model Code & Availability] you can then check the availability of the mounting flange as well as auxiliary ports and compile your desired configuration using the short designations as a segment of the model code.

## Dimensions

Dimensions upon request

## Dimensions

Dimensions upon request

| | | | |
|---|---|---|---|
| A | High pressure work port, ISO 6162-2, If pressurised - motor runs clockwise Nom. pres.: 450 bar, max. press.: 500 bar | AX<br>BX | Pressure equalization port |
| B | High pressure work port, ISO 6162-2, If pressurised - motor runs counter-clockwise Nom. pres.: 450 bar, max. press.: 500 bar | T1 | Drain / vent port, ISO 6149 |
| | | T2 | Drain / vent port, ISO 6149 |

| | | | |
|---|---|---|---|
| G | Ext. control pressure supply, ISO 6149 | | |
| U | Bearing flush port, ISO 6149 | | |
| Y1 | Measuring port, ISO 6149 | | |
| | | | |

OVERVIEW
Key Facts
CONFIGURATION
Modelcode & Availability
TECHNICAL SPECIFICATION
General Technical Data
Operating Parameters
Controls
Sensors
Electric Interfaces
Connectors
Mechanical Interfaces
Flanges
Shafts
Hydraulical Interfaces
Work Ports
Auxiliary Ports
Functions/Options

ISO 3019-1/ SAE J744
C4 / CMV 60
C2 / CMV 85
D4 / CMV 115
D4 / CMV 140
D4 / CMV 170
E4 / CMV 215

ISO 3019-2 metric
M4 / CMV 60
N4 / CMV 85
P4 / CMV 115
R4 / CMV 140
R4 / CMV 170
S4 / CMV 215

Plug-in, similar to ISO 3019-2
P2 / CMV 60
Y2 / CMV 85
S2 / CMV 115
S2 / CMV 140
S2 / CMV 170
Z4 / CMV 215

# Technical Specification | Mounting Flanges Auxiliary Ports | ISO 3019-1/SAE J744 | **C4/CMV60**

In the following you will find the technical specifications of the mounting flanges and auxiliary ports. They are clustered according to the standard and nominal sizes. First get an overview of the dimensions. Note the short designations such as „C4“ or „E4“. In the section [Model Code & Availability] you can then check the availability of the mounting flange as well as auxiliary ports and compile your desired configuration using the short designations as a segment of the model code.

## Dimensions - side view

Dimensions upon request

## Dimensions - front view

Dimensions upon request

| | | | |
|---|---|---|---|
| A | High pressure work port, ISO 6162-2, If pressurised - motor runs clockwise Nom. pres.: 450 bar, max. press.: 500 bar | AX<br>BX | Pressure equalization port |
| B | High pressure work port, ISO 6162-2, If pressurised - motor runs counter-clockwise Nom. pres.: 450 bar, max. press.: 500 bar | T1 | Drain / vent port, ISO 6149 |
| | | T2 | Drain / vent port, ISO 6149 |

| | | | |
|---|---|---|---|
| G | Ext. control pressure supply, ISO 6149 | | |
| U | Bearing flush port, ISO 6149 | | |
| Y1 | Measuring port, ISO 6149 | | |
| | | | |

# Technical Specification | Mounting Flanges Auxiliary Ports | ISO 3019-1/SAE J744 | **C4/CMV60**


OVERVIEW
- Key Facts

CONFIGURATION
- Modelcode & Availability

TECHNICAL SPECIFICATION
- General Technical Data
- Operating Parameters
- Controls
- Sensors
- Electric Interfaces
  - Connectors
- Mechanical Interfaces
  - Flanges
  - Shafts
- Hydraulical Interfaces
  - Work Ports
  - Auxiliary Ports
- Functions/Options

ISO 3019-1/ SAE J744
- C4 / CMV 60
- C2 / CMV 85
- D4 / CMV 115
- D4 / CMV 140
- D4 / CMV 170
- E4 / CMV 215

ISO 3019-2 metric
- M4 / CMV 60
- N4 / CMV 85
- P4 / CMV 115
- R4 / CMV 140
- R4 / CMV 170
- S4 / CMV 215

Plug-in, similar to ISO 3019-2
- P2 / CMV 60
- Y2 / CMV 85
- S2 / CMV 115
- S2 / CMV 140
- S2 / CMV 170
- Z4 / CMV 215


In the following you will find the technical specifications of the mounting flanges and auxiliary ports. They are clustered according to the standard and nominal sizes. First get an overview of the dimensions. Note the short designations such as „C4“ or „E4“. In the section [Model Code & Availability] you can then check the availability of the mounting flange as well as auxiliary ports and compile your desired configuration using the short designations as a segment of the model code.

## Dimensions

Dimensions upon request

## Dimensions

Dimensions upon request

| | | | |
|---|---|---|---|
| A | High pressure work port, ISO 6162-2, If pressurised - motor runs clockwise Nom. pres.: 450 bar, max. press.: 500 bar | AX | Pressure equalization port |
| | | BX | |
| B | High pressure work port, ISO 6162-2, If pressurised - motor runs counter-clockwise Nom. pres.: 450 bar, max. press.: 500 bar | T1 | Drain / vent port, ISO 6149 |
| | | T2 | Drain / vent port, ISO 6149 |

| | | | |
|---|---|---|---|
| G | Ext. control pressure supply, ISO 6149 | | |
| U | Bearing flush port, ISO 6149 | | |
| Y1 | Measuring port, ISO 6149 | | |
| | | | |

# Technical Specification | Mounting Flanges Auxiliary Ports | ISO 3019-1/SAE J744 | **C2/CMV85**


OVERVIEW
- Key Facts

CONFIGURATION
- Modelcode & Availability

TECHNICAL SPECIFICATION
- General Technical Data
- Operating Parameters
- Controls
- Sensors
- Electric Interfaces
  - Connectors
- Mechanical Interfaces
  - Flanges
  - Shafts
- Hydraulical Interfaces
  - Work Ports
  - Auxiliary Ports
- Functions/Options

ISO 3019-1/ SAE J744
- C4 / CMV 60
- C2 / CMV 85
- D4 / CMV 115
- D4 / CMV 140
- D4 / CMV 170
- E4 / CMV 215

ISO 3019-2 metric
- M4 / CMV 60
- N4 / CMV 85
- P4 / CMV 115
- R4 / CMV 140
- R4 / CMV 170
- S4 / CMV 215

Plug-in, similar to ISO 3019-2
- P2 / CMV 60
- Y2 / CMV 85
- S2 / CMV 115
- S2 / CMV 140
- S2 / CMV 170
- Z4 / CMV 215


In the following you will find the technical specifications of the mounting flanges and auxiliary ports. They are clustered according to the standard and nominal sizes. First get an overview of the dimensions. Note the short designations such as „C4“ or „E4“. In the section [Model Code & Availability] you can then check the availability of the mounting flange as well as auxiliary ports and compile your desired configuration using the short designations as a segment of the model code.

## Dimensions

Dimensions upon request

## Dimensions

Dimensions upon request

| | | | |
|---|---|---|---|
| A | High pressure work port, ISO 6162-2, SAE 1“<br>If pressurised - motor runs clockwise<br>Nom. pres.: 450 bar, max. press.: 500 bar | AX | Pressure equalization port |
| | | BX | |
| B | High pressure work port, ISO 6162-2, SAE 1“<br>If pressurised - motor runs counter-clockwise<br>Nom. pres.: 450 bar, max. press.: 500 bar | T1 | Drain / vent port, ISO 6149, M22x1.5, 15.5 mm deep |
| | | T2 | Drain / vent port, ISO 6149, M27x2, 19 mm deep |

| | | | |
|---|---|---|---|
| G | Ext. control pressure supply, ISO 6149, M14x1.5, 11.5 mm deep | | |
| U | Bearing flush port, ISO 6149, M18x1.5, 14.5 mm deep | | |
| Y1 | Measuring port, ISO 6149, M14x1.5, 11.5 mm deep | | |
| | | | |

# Technical Specification | Mounting Flanges Auxiliary Ports | ISO 3019-1/SAE J744 | **C2/CMV85**


OVERVIEW
- Key Facts

CONFIGURATION
- Modelcode & Availability

TECHNICAL SPECIFICATION
- General Technical Data
- Operating Parameters
- Controls
- Sensors
- Electric Interfaces
  - Connectors
- Mechanical Interfaces
  - Flanges
  - Shafts
- Hydraulical Interfaces
  - Work Ports
  - Auxiliary Ports
- Functions/Options

ISO 3019-1/ SAE J744
- C4 / CMV 60
- C2 / CMV 85
- D4 / CMV 115
- D4 / CMV 140
- D4 / CMV 170
- E4 / CMV 215

ISO 3019-2 metric
- M4 / CMV 60
- N4 / CMV 85
- P4 / CMV 115
- R4 / CMV 140
- R4 / CMV 170
- S4 / CMV 215

Plug-in, similar to ISO 3019-2
- P2 / CMV 60
- Y2 / CMV 85
- S2 / CMV 115
- S2 / CMV 140
- S2 / CMV 170
- Z4 / CMV 215


In the following you will find the technical specifications of the mounting flanges and auxiliary ports. They are clustered according to the standard and nominal sizes. First get an overview of the dimensions. Note the short designations such as „C4“ or „E4“. In the section [Model Code & Availability] you can then check the availability of the mounting flange as well as auxiliary ports and compile your desired configuration using the short designations as a segment of the model code.

## Dimensions

Dimensions upon request

## Dimensions

Dimensions upon request

| | | | |
|---|---|---|---|
| A | High pressure work port, ISO 6162-2, SAE 1“<br>If pressurised - motor runs clockwise<br>Nom. pres.: 450 bar, max. press.: 500 bar | AX | Pressure equalization port |
| | | BX | |
| B | High pressure work port, ISO 6162-2, SAE 1“<br>If pressurised - motor runs counter-clockwise<br>Nom. pres.: 450 bar, max. press.: 500 bar | T1 | Drain / vent port, ISO 6149, M22x1.5, 15.5 mm deep |
| | | T2 | Drain / vent port, ISO 6149, M27x2, 19 mm deep |

| | | | |
|---|---|---|---|
| G | Ext. control pressure supply, ISO 6149, M14x1.5, 11.5 mm deep | | |
| U | Bearing flush port, ISO 6149, M18x1.5, 14.5 mm deep | | |
| Y1 | Measuring port, ISO 6149, M14x1.5, 11.5 mm deep | | |
| | | | |

# Technical Specification | Mounting Flanges Auxiliary Ports | ISO 3019-1/SAE J744 | **C2/CMV85**


OVERVIEW
- Key Facts

CONFIGURATION
- Modelcode & Availability

TECHNICAL SPECIFICATION
- General Technical Data
- Operating Parameters
- Controls
- Sensors
- Electric Interfaces
  - Connectors
- Mechanical Interfaces
  - Flanges
  - Shafts
- Hydraulical Interfaces
  - Work Ports
  - Auxiliary Ports
- Functions/Options

ISO 3019-1/ SAE J744
- C4 / CMV 60
- C2 / CMV 85
- D4 / CMV 115
- D4 / CMV 140
- D4 / CMV 170
- E4 / CMV 215

ISO 3019-2 metric
- M4 / CMV 60
- N4 / CMV 85
- P4 / CMV 115
- R4 / CMV 140
- R4 / CMV 170
- S4 / CMV 215

Plug-in, similar to ISO 3019-2
- P2 / CMV 60
- Y2 / CMV 85
- S2 / CMV 115
- S2 / CMV 140
- S2 / CMV 170
- Z4 / CMV 215


In the following you will find the technical specifications of the mounting flanges and auxiliary ports. They are clustered according to the standard and nominal sizes. First get an overview of the dimensions. Note the short designations such as „C4“ or „E4“. In the section [Model Code & Availability] you can then check the availability of the mounting flange as well as auxiliary ports and compile your desired configuration using the short designations as a segment of the model code.

## Dimensions

Dimensions upon request

## Dimensions

Dimensions upon request

| | | | |
|---|---|---|---|
| A | High pressure work port, ISO 6162-2, SAE 1“<br>If pressurised - motor runs clockwise<br>Nom. pres.: 450 bar, max. press.: 500 bar | AX | Pressure equalization port |
| | | BX | |
| B | High pressure work port, ISO 6162-2, SAE 1“<br>If pressurised - motor runs counter-clockwise<br>Nom. pres.: 450 bar, max. press.: 500 bar | T1 | Drain / vent port, ISO 6149, M22x1.5, 15.5 mm deep |
| | | T2 | Drain / vent port, ISO 6149, M27x2, 19 mm deep |

| | | | |
|---|---|---|---|
| G | Ext. control pressure supply, ISO 6149, M14x1.5, 11.5 mm deep | | |
| U | Bearing flush port, ISO 6149, M18x1.5, 14.5 mm deep | | |
| Y1 | Measuring port, ISO 6149, M14x1.5, 11.5 mm deep | | |
| | | | |

# Technical Specification | Mounting Flanges Auxiliary Ports | ISO 3019-1/SAE J744 | **D4/CMV115**


OVERVIEW
- Key Facts

CONFIGURATION
- Modelcode & Availability

TECHNICAL SPECIFICATION
- General Technical Data
- Operating Parameters
- Controls
- Sensors
- Electric Interfaces
  - Connectors
- Mechanical Interfaces
  - Flanges
  - Shafts
- Hydraulical Interfaces
  - Work Ports
  - Auxiliary Ports
- Functions/Options

ISO 3019-1/ SAE J744
- C4 / CMV 60
- C2 / CMV 85
- D4 / CMV 115
- D4 / CMV 140
- D4 / CMV 170
- E4 / CMV 215

ISO 3019-2 metric
- M4 / CMV 60
- N4 / CMV 85
- P4 / CMV 115
- R4 / CMV 140
- R4 / CMV 170
- S4 / CMV 215

Plug-in, similar to ISO 3019-2
- P2 / CMV 60
- Y2 / CMV 85
- S2 / CMV 115
- S2 / CMV 140
- S2 / CMV 170
- Z4 / CMV 215


In the following you will find the technical specifications of the mounting flanges and auxiliary ports. They are clustered according to the standard and nominal sizes. First get an overview of the dimensions. Note the short designations such as „C4“ or „E4“. In the section [Model Code & Availability] you can then check the availability of the mounting flange as well as auxiliary ports and compile your desired configuration using the short designations as a segment of the model code.

## Dimensions - Top view

Dimensions
upon request

## Dimensions

Dimensions
upon request

| | | | |
|---|---|---|---|
| A | High pressure work port, ISO 6162-2, SAE 1“<br>If pressurised - motor runs clockwise<br>Nom. pres.: 450 bar, max. press.: 500 bar | AX | Pressure equalization port |
| | | BX | |
| B | High pressure work port, ISO 6162-2, SAE 1“<br>If pressurised - motor runs counter-clockwise<br>Nom. pres.: 450 bar, max. press.: 500 bar | T1 | Drain / vent port, ISO 6149, M27x2, 19 mm deep |
| | | T2 | Drain / vent port, ISO 6149, M33x2, 19 mm deep |

| | | | |
|---|---|---|---|
| G | Ext. control pressure supply, ISO 6149, M14x1.5, 11.5 mm deep | | |
| U | Bearing flush port, ISO 6149, M18x1.5, 14.5 mm deep | | |
| Y1 | Measuring port, ISO 6149, M14x1.5, 11.5 mm deep | | |
| | | | |

# Technical Specification | Mounting Flanges Auxiliary Ports | ISO 3019-1/SAE J744 | **D4/CMV115**


OVERVIEW
- Key Facts

CONFIGURATION
- Modelcode & Availability

TECHNICAL SPECIFICATION
- General Technical Data
- Operating Parameters
- Controls
- Sensors
- Electric Interfaces
  - Connectors
- Mechanical Interfaces
  - Flanges
  - Shafts
- Hydraulical Interfaces
  - Work Ports
  - Auxiliary Ports
- Functions/Options

ISO 3019-1/ SAE J744
- C4 / CMV 60
- C2 / CMV 85
- D4 / CMV 115
- D4 / CMV 140
- D4 / CMV 170
- E4 / CMV 215

ISO 3019-2 metric
- M4 / CMV 60
- N4 / CMV 85
- P4 / CMV 115
- R4 / CMV 140
- R4 / CMV 170
- S4 / CMV 215

Plug-in, similar to ISO 3019-2
- P2 / CMV 60
- Y2 / CMV 85
- S2 / CMV 115
- S2 / CMV 140
- S2 / CMV 170
- Z4 / CMV 215


In the following you will find the technical specifications of the mounting flanges and auxiliary ports. They are clustered according to the standard and nominal sizes. First get an overview of the dimensions. Note the short designations such as „C4“ or „E4“. In the section [Model Code & Availability] you can then check the availability of the mounting flange as well as auxiliary ports and compile your desired configuration using the short designations as a segment of the model code.

## Dimensions - Top view

Dimensions upon request

## Dimensions

Dimensions upon request

| | | | |
|---|---|---|---|
| A | High pressure work port, ISO 6162-2, SAE 1“<br>If pressurised - motor runs clockwise<br>Nom. pres.: 450 bar, max. press.: 500 bar | AX | Pressure equalization port |
| | | BX | |
| B | High pressure work port, ISO 6162-2, SAE 1“<br>If pressurised - motor runs counter-clockwise<br>Nom. pres.: 450 bar, max. press.: 500 bar | T1 | Drain / vent port, ISO 6149, M27x2, 19 mm deep |
| | | T2 | Drain / vent port, ISO 6149, M33x2, 19 mm deep |

| | | | |
|---|---|---|---|
| G | Ext. control pressure supply, ISO 6149, M14x1.5, 11.5 mm deep | | |
| U | Bearing flush port, ISO 6149, M18x1.5, 14.5 mm deep | | |
| Y1 | Measuring port, ISO 6149, M14x1.5, 11.5 mm deep | | |
| | | | |

# Technical Specification | Mounting Flanges Auxiliary Ports | ISO 3019-1/SAE J744 | **D4/CMV115**


OVERVIEW
- Key Facts

CONFIGURATION
- Modelcode & Availability

TECHNICAL SPECIFICATION
- General Technical Data
- Operating Parameters
- Controls
- Sensors
- Electric Interfaces
  - Connectors
- Mechanical Interfaces
  - Flanges
  - Shafts
- Hydraulical Interfaces
  - Work Ports
  - Auxiliary Ports
- Functions/Options

ISO 3019-1/ SAE J744
- C4 / CMV 60
- C2 / CMV 85
- D4 / CMV 115
- D4 / CMV 140
- D4 / CMV 170
- E4 / CMV 215

ISO 3019-2 metric
- M4 / CMV 60
- N4 / CMV 85
- P4 / CMV 115
- R4 / CMV 140
- R4 / CMV 170
- S4 / CMV 215

Plug-in, similar to ISO 3019-2
- P2 / CMV 60
- Y2 / CMV 85
- S2 / CMV 115
- S2 / CMV 140
- S2 / CMV 170
- Z4 / CMV 215


In the following you will find the technical specifications of the mounting flanges and auxiliary ports. They are clustered according to the standard and nominal sizes. First get an overview of the dimensions. Note the short designations such as „C4“ or „E4“. In the section [Model Code & Availability] you can then check the availability of the mounting flange as well as auxiliary ports and compile your desired configuration using the short designations as a segment of the model code.

## Dimensions - Top view

Dimensions upon request

## Dimensions

Dimensions upon request

| | | | |
|---|---|---|---|
| A | High pressure work port, ISO 6162-2, SAE 1“<br>If pressurised - motor runs clockwise<br>Nom. pres.: 450 bar, max. press.: 500 bar | AX | Pressure equalization port |
| | | BX | |
| B | High pressure work port, ISO 6162-2, SAE 1“<br>If pressurised - motor runs counter-clockwise<br>Nom. pres.: 450 bar, max. press.: 500 bar | T1 | Drain / vent port, ISO 6149, M27x2, 19 mm deep |
| | | T2 | Drain / vent port, ISO 6149, M33x2, 19 mm deep |

| | | | |
|---|---|---|---|
| G | Ext. control pressure supply, ISO 6149, M14x1.5, 11.5 mm deep | | |
| U | Bearing flush port, ISO 6149, M18x1.5, 14.5 mm deep | | |
| Y1 | Measuring port, ISO 6149, M14x1.5, 11.5 mm deep | | |
| | | | |

# Technical Specification | Mounting Flanges Auxiliary Ports | ISO 3019-1/SAE J744 | **D4/CMV140**


OVERVIEW
- Key Facts

CONFIGURATION
- Modelcode & Availability

TECHNICAL SPECIFICATION
- General Technical Data
- Operating Parameters
- Controls
- Sensors
- Electric Interfaces
  - Connectors
- Mechanical Interfaces
  - Flanges
  - Shafts
- Hydraulical Interfaces
  - Work Ports
  - Auxiliary Ports
- Functions/Options

ISO 3019-1/ SAE J744
- C4 / CMV 60
- C2 / CMV 85
- D4 / CMV 115
- D4 / CMV 140
- D4 / CMV 170
- E4 / CMV 215

ISO 3019-2 metric
- M4 / CMV 60
- N4 / CMV 85
- P4 / CMV 115
- R4 / CMV 140
- R4 / CMV 170
- S4 / CMV 215

Plug-in, similar to ISO 3019-2
- P2 / CMV 60
- Y2 / CMV 85
- S2 / CMV 115
- S2 / CMV 140
- S2 / CMV 170
- Z4 / CMV 215


In the following you will find the technical specifications of the mounting flanges and auxiliary ports. They are clustered according to the standard and nominal sizes. First get an overview of the dimensions. Note the short designations such as „C4“ or „E4“. In the section [Model Code & Availability] you can then check the availability of the mounting flange as well as auxiliary ports and compile your desired configuration using the short designations as a segment of the model code.

## Dimensions

Dimensions upon request

## Dimensions

Dimensions upon request

| | | | |
|---|---|---|---|
| A | High pressure work port, ISO 6162-2, SAE 1 1/4“<br>If pressurised - motor runs clockwise<br>Nom. pres.: 450 bar, max. press.: 500 bar | AX | Pressure equalization port |
| | | BX | |
| B | High pressure work port, ISO 6162-2, SAE 1 1/4“<br>If pressurised - motor runs counter-clockwise<br>Nom. pres.: 450 bar, max. press.: 500 bar | T1 | Drain / vent port, ISO 6149, M27x2, 19 mm deep |
| | | T2 | Drain / vent port, ISO 6149, M33x2, 19 mm deep |

| | | | |
|---|---|---|---|
| G | Ext. control pressure supply, ISO 6149, M14x1.5, 11.5 mm deep | | |
| U | Bearing flush port, ISO 6149, M22x1.5, 15.5 mm deep | | |
| Y1 | Measuring port, ISO 6149, M14x1.5, 11.5 mm deep | | |
| | | | |

# Technical Specification | Mounting Flanges Auxiliary Ports | ISO 3019-1/SAE J744 | **D4/CMV140**


OVERVIEW
- Key Facts

CONFIGURATION
- Modelcode & Availability

TECHNICAL SPECIFICATION
- General Technical Data
- Operating Parameters
- Controls
- Sensors
- Electric Interfaces
  - Connectors
- Mechanical Interfaces
  - Flanges
  - Shafts
- Hydraulical Interfaces
  - Work Ports
  - Auxiliary Ports
- Functions/Options

ISO 3019-1/ SAE J744
- C4 / CMV 60
- C2 / CMV 85
- D4 / CMV 115
- D4 / CMV 140
- D4 / CMV 170
- E4 / CMV 215

ISO 3019-2 metric
- M4 / CMV 60
- N4 / CMV 85
- P4 / CMV 115
- R4 / CMV 140
- R4 / CMV 170
- S4 / CMV 215

Plug-in, similar to ISO 3019-2
- P2 / CMV 60
- Y2 / CMV 85
- S2 / CMV 115
- S2 / CMV 140
- S2 / CMV 170
- Z4 / CMV 215


In the following you will find the technical specifications of the mounting flanges and auxiliary ports. They are clustered according to the standard and nominal sizes. First get an overview of the dimensions. Note the short designations such as „C4“ or „E4“. In the section [Model Code & Availability] you can then check the availability of the mounting flange as well as auxiliary ports and compile your desired configuration using the short designations as a segment of the model code.

## Dimensions

Dimensions upon request

## Dimensions

Dimensions upon request

| | | | |
|---|---|---|---|
| A | High pressure work port, ISO 6162-2, SAE 1 1/4“<br>If pressurised - motor runs clockwise<br>Nom. pres.: 450 bar, max. press.: 500 bar | AX | Pressure equalization port |
| | | BX | |
| B | High pressure work port, ISO 6162-2, SAE 1 1/4“<br>If pressurised - motor runs counter-clockwise<br>Nom. pres.: 450 bar, max. press.: 500 bar | T1 | Drain / vent port, ISO 6149, M27x2, 19 mm deep |
| | | T2 | Drain / vent port, ISO 6149, M33x2, 19 mm deep |

| | | | |
|---|---|---|---|
| G | Ext. control pressure supply, ISO 6149, M14x1.5, 11.5 mm deep | | |
| U | Bearing flush port, ISO 6149, M22x1.5, 15.5 mm deep | | |
| Y1 | Measuring port, ISO 6149, M14x1.5, 11.5 mm deep | | |
| | | | |

# Technical Specification | Mounting Flanges Auxiliary Ports | ISO 3019-1/SAE J744 | **D4/CMV140**


OVERVIEW
- Key Facts

CONFIGURATION
- Modelcode & Availability

TECHNICAL SPECIFICATION
- General Technical Data
- Operating Parameters
- Controls
- Sensors
- Electric Interfaces
  - Connectors
- Mechanical Interfaces
  - Flanges
  - Shafts
- Hydraulical Interfaces
  - Work Ports
  - Auxiliary Ports
- Functions/Options

ISO 3019-1/ SAE J744
- C4 / CMV 60
- C2 / CMV 85
- D4 / CMV 115
- D4 / CMV 140
- D4 / CMV 170
- E4 / CMV 215

ISO 3019-2 metric
- M4 / CMV 60
- N4 / CMV 85
- P4 / CMV 115
- R4 / CMV 140
- R4 / CMV 170
- S4 / CMV 215

Plug-in, similar to ISO 3019-2
- P2 / CMV 60
- Y2 / CMV 85
- S2 / CMV 115
- S2 / CMV 140
- S2 / CMV 170
- Z4 / CMV 215


In the following you will find the technical specifications of the mounting flanges and auxiliary ports. They are clustered according to the standard and nominal sizes. First get an overview of the dimensions. Note the short designations such as „C4“ or „E4“. In the section [Model Code & Availability] you can then check the availability of the mounting flange as well as auxiliary ports and compile your desired configuration using the short designations as a segment of the model code.

## Dimensions

Dimensions upon request

## Dimensions

Dimensions upon request

| | | | |
|---|---|---|---|
| A | High pressure work port, ISO 6162-2, SAE 1 1/4“<br>If pressurised - motor runs clockwise<br>Nom. pres.: 450 bar, max. press.: 500 bar | AX | Pressure equalization port |
| | | BX | |
| B | High pressure work port, ISO 6162-2, SAE 1 1/4“<br>If pressurised - motor runs counter-clockwise<br>Nom. pres.: 450 bar, max. press.: 500 bar | T1 | Drain / vent port, ISO 6149, M27x2, 19 mm deep |
| | | T2 | Drain / vent port, ISO 6149, M33x2, 19 mm deep |

| | | | |
|---|---|---|---|
| G | Ext. control pressure supply, ISO 6149, M14x1.5, 11.5 mm deep | | |
| U | Bearing flush port, ISO 6149, M22x1.5, 15.5 mm deep | | |
| Y1 | Measuring port, ISO 6149, M14x1.5, 11.5 mm deep | | |
| | | | |

# Technical Specification | Mounting Flanges Auxiliary Ports | ISO 3019-1/SAE J744 | **D4/CMV170**


OVERVIEW
- Key Facts

CONFIGURATION
- Modelcode & Availability

TECHNICAL SPECIFICATION
- General Technical Data
- Operating Parameters
- Controls
- Sensors
- Electric Interfaces
  - Connectors
- Mechanical Interfaces
  - Flanges
  - Shafts
- Hydraulical Interfaces
  - Work Ports
  - Auxiliary Ports
- Functions/Options

ISO 3019-1/ SAE J744
- C4 / CMV 60
- C2 / CMV 85
- D4 / CMV 115
- D4 / CMV 140
- D4 / CMV 170
- E4 / CMV 215

ISO 3019-2 metric
- M4 / CMV 60
- N4 / CMV 85
- P4 / CMV 115
- R4 / CMV 140
- R4 / CMV 170
- S4 / CMV 215

Plug-in, similar to ISO 3019-2
- P2 / CMV 60
- Y2 / CMV 85
- S2 / CMV 115
- S2 / CMV 140
- S2 / CMV 170
- Z4 / CMV 215


In the following you will find the technical specifications of the mounting flanges and auxiliary ports. They are clustered according to the standard and nominal sizes. First get an overview of the dimensions. Note the short designations such as „C4“ or „E4“. In the section [Model Code & Availability] you can then check the availability of the mounting flange as well as auxiliary ports and compile your desired configuration using the short designations as a segment of the model code.

## Dimensions

Dimensions upon request

## Dimensions

Dimensions upon request

| | | | |
|---|---|---|---|
| A | High pressure work port, ISO 6162-2, SAE 1 1/4“<br>If pressurised - motor runs clockwise<br>Nom. pres.: 450 bar, max. press.: 500 bar | AX<br>BX | Pressure equalization port, ISO 6149, M14x1.5, 11.5 mm deep |
| B | High pressure work port, ISO 6162-2, SAE 1 1/4“<br>If pressurised - motor runs counter-clockwise<br>Nom. pres.: 450 bar, max. press.: 500 bar | T1 | Drain / vent port, ISO 6149, M27x2, 19 mm deep |
| | | T2 | Drain / vent port, ISO 6149, M33x2, 19 mm deep |

| | | | |
|---|---|---|---|
| G | Ext. control pressure supply, ISO 6149, M14x1.5, 11.5 mm deep | | |
| U | Bearing flush port, ISO 6149, M22x1.5, 15.5 mm deep | | |
| Y1 | Measuring port, ISO 6149, M14x1.5, 11.5 mm deep | | |
| | | | |

# Technical Specification | Mounting Flanges Auxiliary Ports | ISO 3019-1/SAE J744 | **D4/CMV170**


OVERVIEW
- Key Facts

CONFIGURATION
- Modelcode & Availability

TECHNICAL SPECIFICATION
- General Technical Data
- Operating Parameters
- Controls
- Sensors
- Electric Interfaces
  - Connectors
- Mechanical Interfaces
  - Flanges
  - Shafts
- Hydraulical Interfaces
  - Work Ports
  - Auxiliary Ports
- Functions/Options

ISO 3019-1/ SAE J744
- C4 / CMV 60
- C2 / CMV 85
- D4 / CMV 115
- D4 / CMV 140
- D4 / CMV 170
- E4 / CMV 215

ISO 3019-2 metric
- M4 / CMV 60
- N4 / CMV 85
- P4 / CMV 115
- R4 / CMV 140
- R4 / CMV 170
- S4 / CMV 215

Plug-in, similar to ISO 3019-2
- P2 / CMV 60
- Y2 / CMV 85
- S2 / CMV 115
- S2 / CMV 140
- S2 / CMV 170
- Z4 / CMV 215


In the following you will find the technical specifications of the mounting flanges and auxiliary ports. They are clustered according to the standard and nominal sizes. First get an overview of the dimensions. Note the short designations such as „C4“ or „E4“. In the section [Model Code & Availability] you can then check the availability of the mounting flange as well as auxiliary ports and compile your desired configuration using the short designations as a segment of the model code.

## Dimensions

Dimensions upon request

## Dimensions

Dimensions upon request

| | | | |
|---|---|---|---|
| A | High pressure work port, ISO 6162-2, SAE 1 1/4“<br>If pressurised - motor runs clockwise<br>Nom. pres.: 450 bar, max. press.: 500 bar | AX<br>BX | Pressure equalization port, ISO 6149, M14x1.5, 11.5 mm deep |
| B | High pressure work port, ISO 6162-2, SAE 1 1/4“<br>If pressurised - motor runs counter-clockwise<br>Nom. pres.: 450 bar, max. press.: 500 bar | T1 | Drain / vent port, ISO 6149, M27x2, 19 mm deep |
| | | T2 | Drain / vent port, ISO 6149, M33x2, 19 mm deep |

| | | | |
|---|---|---|---|
| G | Ext. control pressure supply, ISO 6149, M14x1.5, 11.5 mm deep | | |
| U | Bearing flush port, ISO 6149, M22x1.5, 15.5 mm deep | | |
| Y1 | Measuring port, ISO 6149, M14x1.5, 11.5 mm deep | | |
| | | | |

# Technical Specification | Mounting Flanges Auxiliary Ports | ISO 3019-1/SAE J744 | **D4/CMV170**


OVERVIEW
- Key Facts

CONFIGURATION
- Modelcode & Availability

TECHNICAL SPECIFICATION
- General Technical Data
- Operating Parameters
- Controls
- Sensors
- Electric Interfaces
  - Connectors
- Mechanical Interfaces
  - Flanges
  - Shafts
- Hydraulical Interfaces
  - Work Ports
  - Auxiliary Ports
- Functions/Options

ISO 3019-1/ SAE J744
- C4 / CMV 60
- C2 / CMV 85
- D4 / CMV 115
- D4 / CMV 140
- D4 / CMV 170
- E4 / CMV 215

ISO 3019-2 metric
- M4 / CMV 60
- N4 / CMV 85
- P4 / CMV 115
- R4 / CMV 140
- R4 / CMV 170
- S4 / CMV 215

Plug-in, similar to ISO 3019-2
- P2 / CMV 60
- Y2 / CMV 85
- S2 / CMV 115
- S2 / CMV 140
- S2 / CMV 170
- Z4 / CMV 215


In the following you will find the technical specifications of the mounting flanges and auxiliary ports. They are clustered according to the standard and nominal sizes. First get an overview of the dimensions. Note the short designations such as „C4“ or „E4“. In the section [Model Code & Availability] you can then check the availability of the mounting flange as well as auxiliary ports and compile your desired configuration using the short designations as a segment of the model code.

## Dimensions

Dimensions upon request

## Dimensions

Dimensions upon request

| | | | |
|---|---|---|---|
| A | High pressure work port, ISO 6162-2, SAE 1 1/4“<br>If pressurised - motor runs clockwise<br>Nom. pres.: 450 bar, max. press.: 500 bar | AX<br>BX | Pressure equalization port, ISO 6149, M14x1.5, 11.5 mm deep |
| B | High pressure work port, ISO 6162-2, SAE 1 1/4“<br>If pressurised - motor runs counter-clockwise<br>Nom. pres.: 450 bar, max. press.: 500 bar | T1 | Drain / vent port, ISO 6149, M27x2, 19 mm deep |
| | | T2 | Drain / vent port, ISO 6149, M33x2, 19 mm deep |

| | | | |
|---|---|---|---|
| G | Ext. control pressure supply, ISO 6149, M14x1.5, 11.5 mm deep | | |
| U | Bearing flush port, ISO 6149, M22x1.5, 15.5 mm deep | | |
| Y1 | Measuring port, ISO 6149, M14x1.5, 11.5 mm deep | | |
| | | | |

# Technical Specification | Mounting Flanges Auxiliary Ports | ISO 3019-1/SAE J744 | **E4/CMV215**


OVERVIEW
- Key Facts

CONFIGURATION
- Modelcode & Availability

TECHNICAL SPECIFICATION
- General Technical Data
- Operating Parameters
- Controls
- Sensors
- Electric Interfaces
  - Connectors
- Mechanical Interfaces
  - Flanges
  - Shafts
- Hydraulical Interfaces
  - Work Ports
  - Auxiliary Ports
- Functions/Options

ISO 3019-1/ SAE J744
- C4 / CMV 60
- C2 / CMV 85
- D4 / CMV 115
- D4 / CMV 140
- D4 / CMV 170
- E4 / CMV 215

ISO 3019-2 metric
- M4 / CMV 60
- N4 / CMV 85
- P4 / CMV 115
- R4 / CMV 140
- R4 / CMV 170
- S4 / CMV 215

Plug-in, similar to ISO 3019-2
- P2 / CMV 60
- Y2 / CMV 85
- S2 / CMV 115
- S2 / CMV 140
- S2 / CMV 170
- Z4 / CMV 215


In the following you will find the technical specifications of the mounting flanges and auxiliary ports. They are clustered according to the standard and nominal sizes. First get an overview of the dimensions. Note the short designations such as „C4“ or „E4“. In the section [Model Code & Availability] you can then check the availability of the mounting flange as well as auxiliary ports and compile your desired configuration using the short designations as a segment of the model code.

## Dimensions

Dimensions upon request

## Dimensions

Dimensions upon request

| | | | |
|---|---|---|---|
| A | High pressure work port, ISO 6162-2, SAE 1 1/4“<br>If pressurised - motor runs clockwise<br>Nom. pres.: 450 bar, max. press.: 500 bar | AX<br>BX | Pressure equalization port, ISO 6149, M22x1.5, 15.5 mm deep |
| B | High pressure work port, ISO 6162-2, SAE 1 1/4“<br>If pressurised - motor runs counter-clockwise<br>Nom. pres.: 450 bar, max. press.: 500 bar | T1 | Drain / vent port, ISO 6149, M33x2, 19 mm deep |
| | | T2 | Drain / vent port, ISO 6149, M42x2, 19.5 mm deep |

| | | | |
|---|---|---|---|
| G | Ext. control pressure supply, ISO 6149, M14x1.5, 11.5 mm deep | | |
| U | Bearing flush port, ISO 6149, M22x1.5, 15.5 mm deep | | |
| Y1 | Measuring port, ISO 6149, M14x1.5, 11.5 mm deep | | |
| | | | |

# Technical Specification | Mounting Flanges Auxiliary Ports | ISO 3019-1/SAE J744 | **E4/CMV215**


OVERVIEW
- Key Facts

CONFIGURATION
- Modelcode & Availability

TECHNICAL SPECIFICATION
- General Technical Data
- Operating Parameters
- Controls
- Sensors
- Electric Interfaces
  - Connectors
- Mechanical Interfaces
  - Flanges
  - Shafts
- Hydraulical Interfaces
  - Work Ports
  - Auxiliary Ports
- Functions/Options

ISO 3019-1/ SAE J744
- C4 / CMV 60
- C2 / CMV 85
- D4 / CMV 115
- D4 / CMV 140
- D4 / CMV 170
- E4 / CMV 215

ISO 3019-2 metric
- M4 / CMV 60
- N4 / CMV 85
- P4 / CMV 115
- R4 / CMV 140
- R4 / CMV 170
- S4 / CMV 215

Plug-in, similar to ISO 3019-2
- P2 / CMV 60
- Y2 / CMV 85
- S2 / CMV 115
- S2 / CMV 140
- S2 / CMV 170
- Z4 / CMV 215


In the following you will find the technical specifications of the mounting flanges and auxiliary ports. They are clustered according to the standard and nominal sizes. First get an overview of the dimensions. Note the short designations such as „C4“ or „E4“. In the section [Model Code & Availability] you can then check the availability of the mounting flange as well as auxiliary ports and compile your desired configuration using the short designations as a segment of the model code.

## Dimensions

Dimensions upon request

## Dimensions

Dimensions upon request

| | | | |
|---|---|---|---|
| A | High pressure work port, ISO 6162-2, SAE 1 1/4“<br>If pressurised - motor runs clockwise<br>Nom. pres.: 450 bar, max. press.: 500 bar | AX<br>BX | Pressure equalization port, ISO 6149, M22x1.5, 15.5 mm deep |
| B | High pressure work port, ISO 6162-2, SAE 1 1/4“<br>If pressurised - motor runs counter-clockwise<br>Nom. pres.: 450 bar, max. press.: 500 bar | T1 | Drain / vent port, ISO 6149, M33x2, 19 mm deep |
| | | T2 | Drain / vent port, ISO 6149, M42x2, 19.5 mm deep |

| | | | |
|---|---|---|---|
| G | Ext. control pressure supply, ISO 6149, M14x1.5, 11.5 mm deep | | |
| U | Bearing flush port, ISO 6149, M22x1.5, 15.5 mm deep | | |
| Y1 | Measuring port, ISO 6149, M14x1.5, 11.5 mm deep | | |
| | | | |

# Technical Specification | Mounting Flanges Auxiliary Ports | ISO 3019-1/SAE J744 | **E4/CMV215**


OVERVIEW
- Key Facts

CONFIGURATION
- Modelcode & Availability

TECHNICAL SPECIFICATION
- General Technical Data
- Operating Parameters
- Controls
- Sensors
- Electric Interfaces
  - Connectors
- Mechanical Interfaces
  - Flanges
  - Shafts
- Hydraulical Interfaces
  - Work Ports
  - Auxiliary Ports
- Functions/Options

ISO 3019-1/ SAE J744
- C4 / CMV 60
- C2 / CMV 85
- D4 / CMV 115
- D4 / CMV 140
- D4 / CMV 170
- E4 / CMV 215

ISO 3019-2 metric
- M4 / CMV 60
- N4 / CMV 85
- P4 / CMV 115
- R4 / CMV 140
- R4 / CMV 170
- S4 / CMV 215

Plug-in, similar to ISO 3019-2
- P2 / CMV 60
- Y2 / CMV 85
- S2 / CMV 115
- S2 / CMV 140
- S2 / CMV 170
- Z4 / CMV 215


In the following you will find the technical specifications of the mounting flanges and auxiliary ports. They are clustered according to the standard and nominal sizes. First get an overview of the dimensions. Note the short designations such as „C4“ or „E4“. In the section [Model Code & Availability] you can then check the availability of the mounting flange as well as auxiliary ports and compile your desired configuration using the short designations as a segment of the model code.

## Dimensions

Dimensions upon request

## Dimensions

Dimensions upon request

| | | | |
|---|---|---|---|
| A | High pressure work port, ISO 6162-2, SAE 1 1/4“<br>If pressurised - motor runs clockwise<br>Nom. pres.: 450 bar, max. press.: 500 bar | AX<br>BX | Pressure equalization port, ISO 6149, M22x1.5, 15.5 mm deep |
| B | High pressure work port, ISO 6162-2, SAE 1 1/4“<br>If pressurised - motor runs counter-clockwise<br>Nom. pres.: 450 bar, max. press.: 500 bar | T1 | Drain / vent port, ISO 6149, M33x2, 19 mm deep |
| | | T2 | Drain / vent port, ISO 6149, M42x2, 19.5 mm deep |

| | | | |
|---|---|---|---|
| G | Ext. control pressure supply, ISO 6149, M14x1.5, 11.5 mm deep | | |
| U | Bearing flush port, ISO 6149, M22x1.5, 15.5 mm deep | | |
| Y1 | Measuring port, ISO 6149, M14x1.5, 11.5 mm deep | | |
| | | | |

# Technical Specification | Mounting Flanges Auxiliary Ports | ISO 3019-2 metric | **M4/CMV60**


OVERVIEW
- Key Facts

CONFIGURATION
- Modelcode & Availability

TECHNICAL SPECIFICATION
- General Technical Data
- Operating Parameters
- Controls
- Sensors
- Electric Interfaces
  - Connectors
- Mechanical Interfaces
  - Flanges
  - Shafts
- Hydraulical Interfaces
  - Work Ports
  - Auxiliary Ports
- Functions/Options

ISO 3019-1/ SAE J744
- C4 / CMV 60
- C2 / CMV 85
- D4 / CMV 115
- D4 / CMV 140
- D4 / CMV 170
- E4 / CMV 215

ISO 3019-2 metric
- M4 / CMV 60
- N4 / CMV 85
- P4 / CMV 115
- R4 / CMV 140
- R4 / CMV 170
- S4 / CMV 215

Plug-in, similar to ISO 3019-2
- P2 / CMV 60
- Y2 / CMV 85
- S2 / CMV 115
- S2 / CMV 140
- S2 / CMV 170
- Z4 / CMV 215


In the following you will find the technical specifications of the mounting flanges and auxiliary ports. They are clustered according to the standard and nominal sizes. First get an overview of the dimensions. Note the short designations such as „C4“ or „E4“. In the section [Model Code & Availability] you can then check the availability of the mounting flange as well as auxiliary ports and compile your desired configuration using the short designations as a segment of the model code.

## Dimensions - Top view

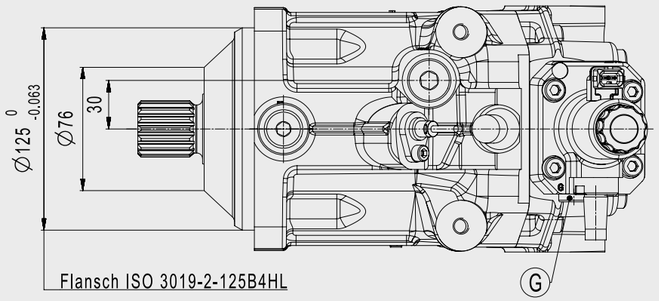


| | | | |
|---|---|---|---|
| A | High pressure work port, ISO 6162-2, If pressurised - motor runs clockwise Nom. pres.: 450 bar, max. press.: 500 bar | AX | Pressure equalization port |
| | | BX | |
| B | High pressure work port, ISO 6162-2, If pressurised - motor runs counter-clockwise Nom. pres.: 450 bar, max. press.: 500 bar | T1 | Drain / vent port, ISO 6149 |
| | | T2 | Drain / vent port, ISO 6149 |

| | | | |
|---|---|---|---|
| G | Ext. control pressure supply, ISO 6149 | | |
| U | Bearing flush port, ISO 6149 | | |
| Y1 | Measuring port, ISO 6149 | | |
| | | | |

# Technical Specification | Mounting Flanges Auxiliary Ports | ISO 3019-2 metric | **M4/CMV60**

In the following you will find the technical specifications of the mounting flanges and auxiliary ports. They are clustered according to the standard and nominal sizes. First get an overview of the dimensions. Note the short designations such as „C4“ or „E4“. In the section [Model Code & Availability] you can then check the availability of the mounting flange as well as auxiliary ports and compile your desired configuration using the short designations as a segment of the model code.

## Dimensions - Side view

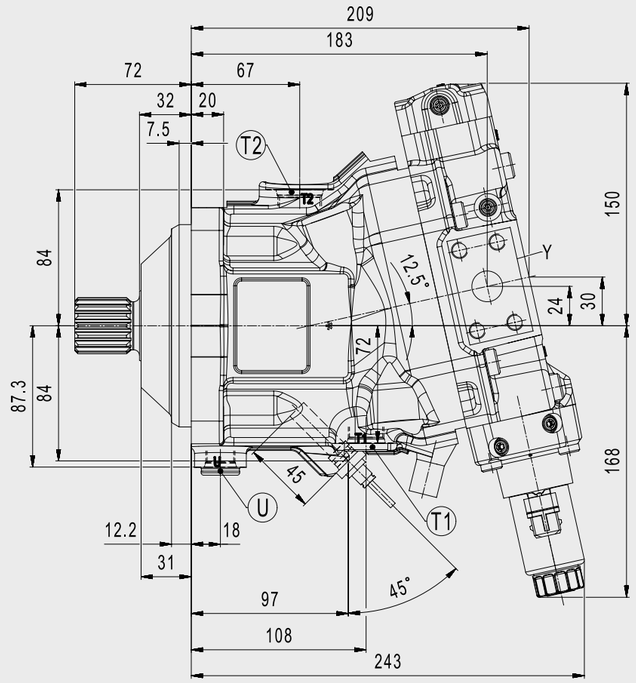


## Dimensions - Front view

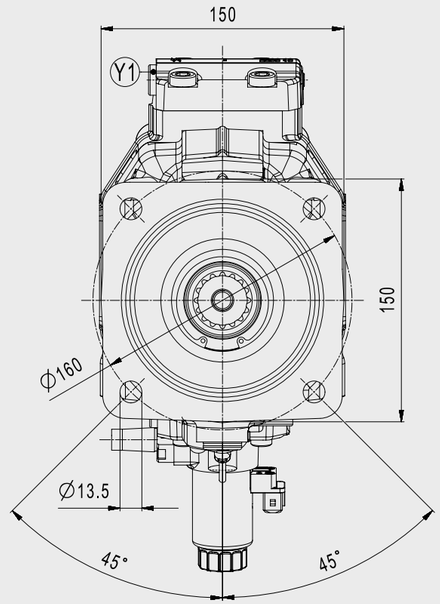


| | | | |
|---|---|---|---|
| A | High pressure work port, ISO 6162-2,<br>If pressurised - motor runs clockwise<br>Nom. pres.: 450 bar, max. press.: 500 bar | AX<br>BX | Pressure equalization port |
| B | High pressure work port, ISO 6162-2,<br>If pressurised - motor runs counter-clockwise<br>Nom. pres.: 450 bar, max. press.: 500 bar | T1 | Drain / vent port, ISO 6149 |
| | | T2 | Drain / vent port, ISO 6149 |

| | | | |
|---|---|---|---|
| G | Ext. control pressure supply, ISO 6149 | | |
| U | Bearing flush port, ISO 6149 | | |
| Y1 | Measuring port, ISO 6149 | | |
| | | | |

# Technical Specification | Mounting Flanges Auxiliary Ports | ISO 3019-2 metric | **M4/CMV60**


OVERVIEW
- Key Facts

CONFIGURATION
- Modelcode & Availability

TECHNICAL SPECIFICATION
- General Technical Data
- Operating Parameters
- Controls
- Sensors
- Electric Interfaces
  - Connectors
- Mechanical Interfaces
  - Flanges
  - Shafts
- Hydraulical Interfaces
  - Work Ports
  - Auxiliary Ports
- Functions/Options

ISO 3019-1/ SAE J744
- C4 / CMV 60
- C2 / CMV 85
- D4 / CMV 115
- D4 / CMV 140
- D4 / CMV 170
- E4 / CMV 215

ISO 3019-2 metric
- M4 / CMV 60
- N4 / CMV 85
- P4 / CMV 115
- R4 / CMV 140
- R4 / CMV 170
- S4 / CMV 215

Plug-in, similar to ISO 3019-2
- P2 / CMV 60
- Y2 / CMV 85
- S2 / CMV 115
- S2 / CMV 140
- S2 / CMV 170
- Z4 / CMV 215


In the following you will find the technical specifications of the mounting flanges and auxiliary ports. They are clustered according to the standard and nominal sizes. First get an overview of the dimensions. Note the short designations such as „C4“ or „E4“. In the section [Model Code & Availability] you can then check the availability of the mounting flange as well as auxiliary ports and compile your desired configuration using the short designations as a segment of the model code.

## Dimensions - Back view

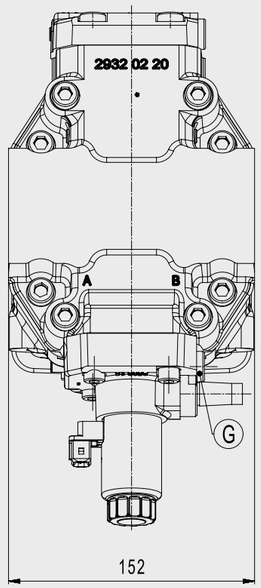


## Dimensions

| | | | |
|---|---|---|---|
| A | High pressure work port, ISO 6162-2,<br>If pressurised - motor runs clockwise<br>Nom. pres.: 450 bar, max. press.: 500 bar | AX<br>BX | Pressure equalization port |
| B | High pressure work port, ISO 6162-2,<br>If pressurised - motor runs counter-clockwise<br>Nom. pres.: 450 bar, max. press.: 500 bar | T1 | Drain / vent port, ISO 6149 |
| | | T2 | Drain / vent port, ISO 6149 |

| | | | |
|---|---|---|---|
| G | Ext. control pressure supply, ISO 6149 | | |
| U | Bearing flush port, ISO 6149 | | |
| Y1 | Measuring port, ISO 6149 | | |
| | | | |

# Technical Specification | Mounting Flanges Auxiliary Ports | ISO 3019-2 metric | **N4/CMV85**


OVERVIEW
- Key Facts

CONFIGURATION
- Modelcode & Availability

TECHNICAL SPECIFICATION
- General Technical Data
- Operating Parameters
- Controls
- Sensors
- Electric Interfaces
  - Connectors
- Mechanical Interfaces
  - Flanges
  - Shafts
- Hydraulical Interfaces
  - Work Ports
  - Auxiliary Ports
- Functions/Options

ISO 3019-1/ SAE J744
- C4 / CMV 60
- C2 / CMV 85
- D4 / CMV 115
- D4 / CMV 140
- D4 / CMV 170
- E4 / CMV 215

ISO 3019-2 metric
- M4 / CMV 60
- N4 / CMV 85
- P4 / CMV 115
- R4 / CMV 140
- R4 / CMV 170
- S4 / CMV 215

Plug-in, similar to ISO 3019-2
- P2 / CMV 60
- Y2 / CMV 85
- S2 / CMV 115
- S2 / CMV 140
- S2 / CMV 170
- Z4 / CMV 215


In the following you will find the technical specifications of the mounting flanges and auxiliary ports. They are clustered according to the standard and nominal sizes. First get an overview of the dimensions. Note the short designations such as „C4“ or „E4“. In the section [Model Code & Availability] you can then check the availability of the mounting flange as well as auxiliary ports and compile your desired configuration using the short designations as a segment of the model code.

## Dimensions - Top view

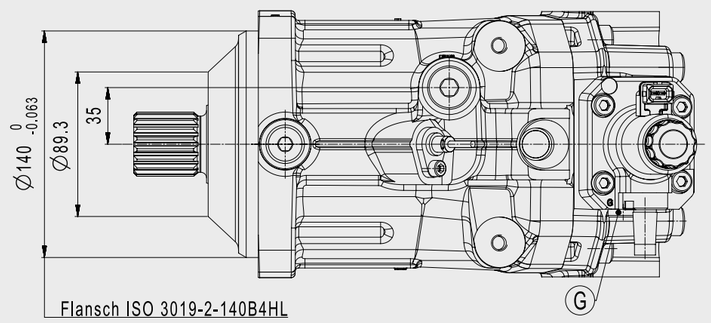


## Dimensions

| | | | |
|---|---|---|---|
| A | High pressure work port, ISO 6162-2, SAE 1“<br>If pressurised - motor runs clockwise<br>Nom. pres.: 450 bar, max. press.: 500 bar | AX | Pressure equalization port |
| | | BX | |
| B | High pressure work port, ISO 6162-2, SAE 1“<br>If pressurised - motor runs counter-clockwise<br>Nom. pres.: 450 bar, max. press.: 500 bar | T1 | Drain / vent port, ISO 6149, M22x1.5, 15.5 mm deep |
| | | T2 | Drain / vent port, ISO 6149, M27x2, 19 mm deep |

| | | | |
|---|---|---|---|
| G | Ext. control pressure supply, ISO 6149, M14x1.5, 11.5 mm deep | | |
| U | Bearing flush port, ISO 6149, M18x1.5, 14.5 mm deep | | |
| Y1 | Measuring port, ISO 6149, M14x1.5, 11.5 mm deep | | |
| | | | |

OVERVIEW
- Key Facts

CONFIGURATION
- Modelcode & Availability

TECHNICAL SPECIFICATION
- General Technical Data
- Operating Parameters
- Controls
- Sensors
- Electric Interfaces
  - Connectors
- Mechanical Interfaces
  - Flanges
  - Shafts
- Hydraulical Interfaces
  - Work Ports
  - Auxiliary Ports
- Functions/Options

ISO 3019-1/ SAE J744
- C4 / CMV 60
- C2 / CMV 85
- D4 / CMV 115
- D4 / CMV 140
- D4 / CMV 170
- E4 / CMV 215

ISO 3019-2 metric
- M4 / CMV 60
- N4 / CMV 85
- P4 / CMV 115
- R4 / CMV 140
- R4 / CMV 170
- S4 / CMV 215

Plug-in, similar to ISO 3019-2
- P2 / CMV 60
- Y2 / CMV 85
- S2 / CMV 115
- S2 / CMV 140
- S2 / CMV 170
- Z4 / CMV 215


# Technical Specification | Mounting Flanges Auxiliary Ports | ISO 3019-2 metric | **N4/CMV85**

In the following you will find the technical specifications of the mounting flanges and auxiliary ports. They are clustered according to the standard and nominal sizes. First get an overview of the dimensions. Note the short designations such as „C4“ or „E4“. In the section [Model Code & Availability] you can then check the availability of the mounting flange as well as auxiliary ports and compile your desired configuration using the short designations as a segment of the model code.

## Dimensions - Side view

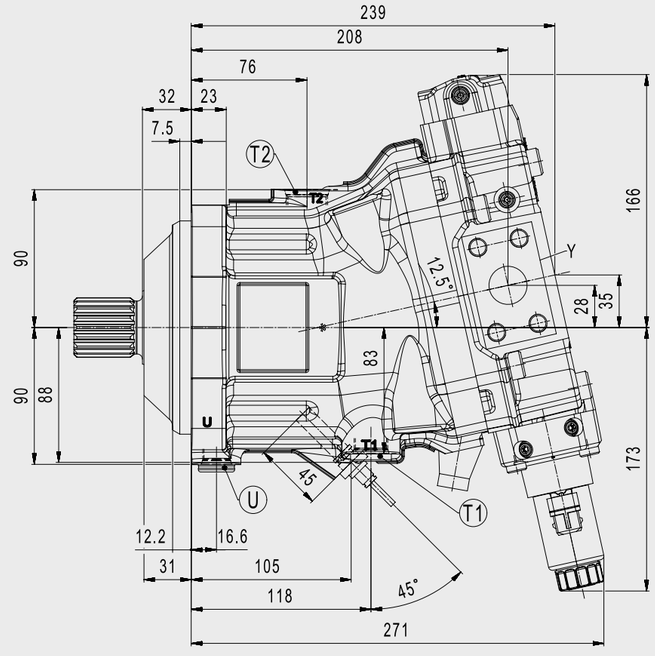


## Dimensions - Front view

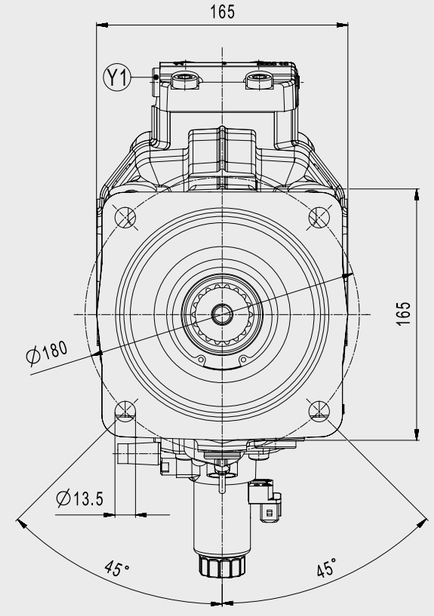


| | | | |
|---|---|---|---|
| A | High pressure work port, ISO 6162-2, SAE 1“<br>If pressurised - motor runs clockwise<br>Nom. pres.: 450 bar, max. press.: 500 bar | AX<br>BX | Pressure equalization port |
| B | High pressure work port, ISO 6162-2, SAE 1“<br>If pressurised - motor runs counter-clockwise<br>Nom. pres.: 450 bar, max. press.: 500 bar | T1<br>T2 | Drain / vent port, ISO 6149, M22x1.5, 15.5 mm deep<br>Drain / vent port, ISO 6149, M27x2, 19 mm deep |

| | | | |
|---|---|---|---|
| G | Ext. control pressure supply, ISO 6149, M14x1.5, 11.5 mm deep | | |
| U | Bearing flush port, ISO 6149, M18x1.5, 14.5 mm deep | | |
| Y1 | Measuring port, ISO 6149, M14x1.5, 11.5 mm deep | | |
| | | | |

OVERVIEW
Key Facts
CONFIGURATION
Modelcode & Availability
TECHNICAL SPECIFICATION
General Technical Data
Operating Parameters
Controls
Sensors
Electric Interfaces
Connectors
Mechanical Interfaces
Flanges
Shafts
Hydraulical Interfaces
Work Ports
Auxiliary Ports
Functions/Options

ISO 3019-1/ SAE J744
C4 / CMV 60
C2 / CMV 85
D4 / CMV 115
D4 / CMV 140
D4 / CMV 170
E4 / CMV 215

ISO 3019-2 metric
M4 / CMV 60
N4 / CMV 85
P4 / CMV 115
R4 / CMV 140
R4 / CMV 170
S4 / CMV 215

Plug-in, similar to ISO 3019-2
P2 / CMV 60
Y2 / CMV 85
S2 / CMV 115
S2 / CMV 140
S2 / CMV 170
Z4 / CMV 215

# Technical Specification | Mounting Flanges Auxiliary Ports | ISO 3019-2 metric | **N4/CMV85**

In the following you will find the technical specifications of the mounting flanges and auxiliary ports. They are clustered according to the standard and nominal sizes. First get an overview of the dimensions. Note the short designations such as „C4“ or „E4“. In the section [Model Code & Availability] you can then check the availability of the mounting flange as well as auxiliary ports and compile your desired configuration using the short designations as a segment of the model code.

## Dimensions - Back view

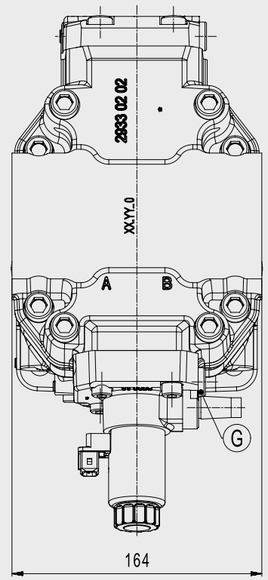


## Dimensions

| | | | |
|---|---|---|---|
| A | High pressure work port, ISO 6162-2, SAE 1“<br>If pressurised - motor runs clockwise<br>Nom. pres.: 450 bar, max. press.: 500 bar | AX<br>BX | Pressure equalization port |
| B | High pressure work port, ISO 6162-2, SAE 1“<br>If pressurised - motor runs counter-clockwise<br>Nom. pres.: 450 bar, max. press.: 500 bar | T1 | Drain / vent port, ISO 6149, M22x1.5, 15.5 mm deep |
| | | T2 | Drain / vent port, ISO 6149, M27x2, 19 mm deep |

| | | | |
|---|---|---|---|
| G | Ext. control pressure supply, ISO 6149, M14x1.5, 11.5 mm deep | | |
| U | Bearing flush port, ISO 6149, M18x1.5, 14.5 mm deep | | |
| Y1 | Measuring port, ISO 6149, M14x1.5, 11.5 mm deep | | |
| | | | |

# Technical Specification | Mounting Flanges Auxiliary Ports | ISO 3019-2 metric | **P4/CMV115**


OVERVIEW
- Key Facts

CONFIGURATION
- Modelcode & Availability

TECHNICAL SPECIFICATION
- General Technical Data
- Operating Parameters
- Controls
- Sensors
- Electric Interfaces
  - Connectors
- Mechanical Interfaces
  - Flanges
  - Shafts
- Hydraulical Interfaces
  - Work Ports
  - Auxiliary Ports
- Functions/Options

ISO 3019-1/ SAE J744
- C4 / CMV 60
- C2 / CMV 85
- D4 / CMV 115
- D4 / CMV 140
- D4 / CMV 170
- E4 / CMV 215

ISO 3019-2 metric
- M4 / CMV 60
- N4 / CMV 85
- P4 / CMV 115
- R4 / CMV 140
- R4 / CMV 170
- S4 / CMV 215

Plug-in, similar to ISO 3019-2
- P2 / CMV 60
- Y2 / CMV 85
- S2 / CMV 115
- S2 / CMV 140
- S2 / CMV 170
- Z4 / CMV 215


In the following you will find the technical specifications of the mounting flanges and auxiliary ports. They are clustered according to the standard and nominal sizes. First get an overview of the dimensions. Note the short designations such as „C4“ or „E4“. In the section [Model Code & Availability] you can then check the availability of the mounting flange as well as auxiliary ports and compile your desired configuration using the short designations as a segment of the model code.

## Dimensions - Top view

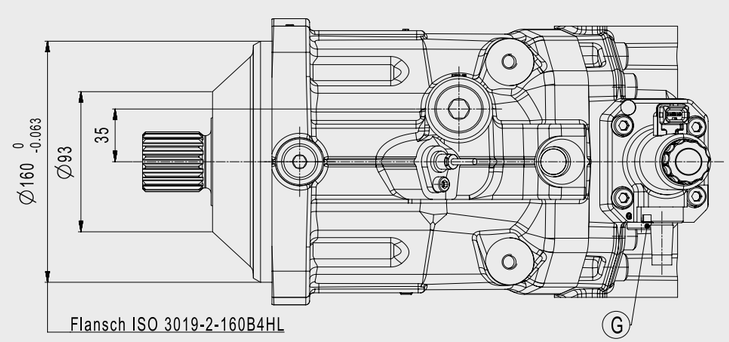


| | | | |
|---|---|---|---|
| A | High pressure work port, ISO 6162-2, SAE 1“<br>If pressurised - motor runs clockwise<br>Nom. pres.: 450 bar, max. press.: 500 bar | AX<br>BX | Pressure equalization port |
| B | High pressure work port, ISO 6162-2, SAE 1“<br>If pressurised - motor runs counter-clockwise<br>Nom. pres.: 450 bar, max. press.: 500 bar | T1 | Drain / vent port, ISO 6149, M27x2, 19 mm deep |
| | | T2 | Drain / vent port, ISO 6149, M33x2, 19 mm deep |

| | | | |
|---|---|---|---|
| G | Ext. control pressure supply, ISO 6149, M14x1.5, 11.5 mm deep | | |
| U | Bearing flush port, ISO 6149, M18x1.5, 14.5 mm deep | | |
| Y1 | Measuring port, ISO 6149, M14x1.5, 11.5 mm deep | | |
| | | | |

# Technical Specification | Mounting Flanges Auxiliary Ports | ISO 3019-2 metric | **P4/CMV115**

In the following you will find the technical specifications of the mounting flanges and auxiliary ports. They are clustered according to the standard and nominal sizes. First get an overview of the dimensions. Note the short designations such as „C4“ or „E4“. In the section [Model Code & Availability] you can then check the availability of the mounting flange as well as auxiliary ports and compile your desired configuration using the short designations as a segment of the model code.

## Dimensions - Side view

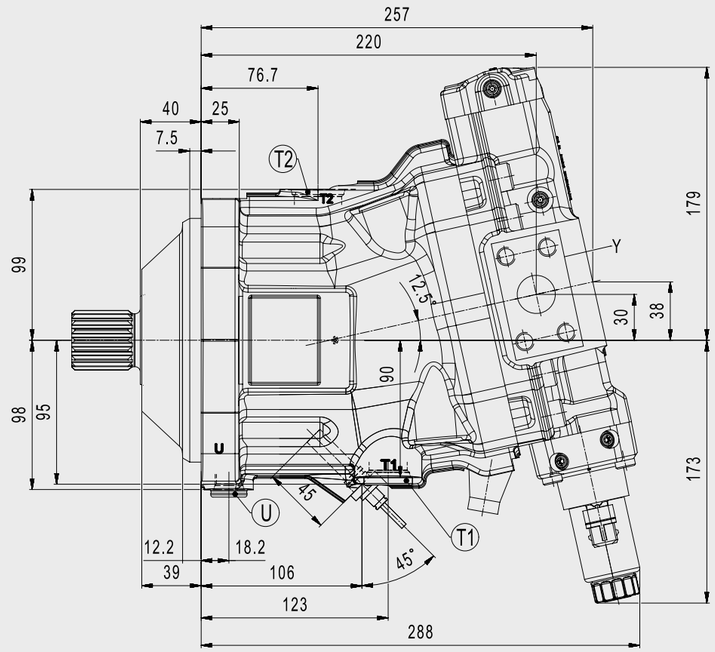


## Dimensions - Front view

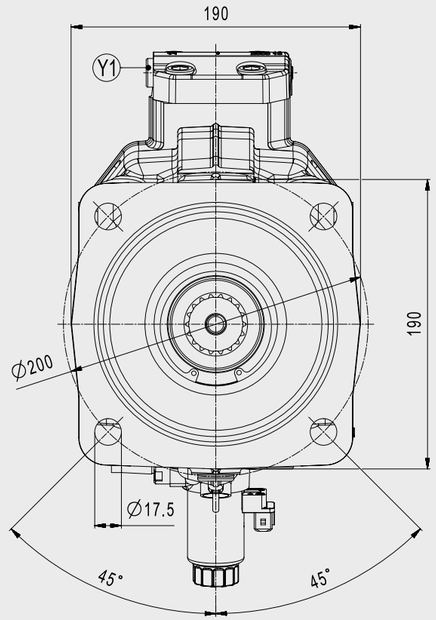


| | | | |
|---|---|---|---|
| A | High pressure work port, ISO 6162-2, SAE 1“<br>If pressurised - motor runs clockwise<br>Nom. pres.: 450 bar, max. press.: 500 bar | AX<br>BX | Pressure equalization port |
| B | High pressure work port, ISO 6162-2, SAE 1“<br>If pressurised - motor runs counter-clockwise<br>Nom. pres.: 450 bar, max. press.: 500 bar | T1 | Drain / vent port, ISO 6149, M27x2, 19 mm deep |
| | | T2 | Drain / vent port, ISO 6149, M33x2, 19 mm deep |

| | | | |
|---|---|---|---|
| G | Ext. control pressure supply, ISO 6149, M14x1.5, 11.5 mm deep | | |
| U | Bearing flush port, ISO 6149, M18x1.5, 14.5 mm deep | | |
| Y1 | Measuring port, ISO 6149, M14x1.5, 11.5 mm deep | | |
| | | | |

# Technical Specification | Mounting Flanges Auxiliary Ports | ISO 3019-2 metric | **P4/CMV115**


OVERVIEW
- Key Facts

CONFIGURATION
- Modelcode & Availability

TECHNICAL SPECIFICATION
- General Technical Data
- Operating Parameters
- Controls
- Sensors
- Electric Interfaces
  - Connectors
- Mechanical Interfaces
  - Flanges
  - Shafts
- Hydraulical Interfaces
  - Work Ports
  - Auxiliary Ports
- Functions/Options

ISO 3019-1/ SAE J744
- C4 / CMV 60
- C2 / CMV 85
- D4 / CMV 115
- D4 / CMV 140
- D4 / CMV 170
- E4 / CMV 215

ISO 3019-2 metric
- M4 / CMV 60
- N4 / CMV 85
- P4 / CMV 115
- R4 / CMV 140
- R4 / CMV 170
- S4 / CMV 215

Plug-in, similar to ISO 3019-2
- P2 / CMV 60
- Y2 / CMV 85
- S2 / CMV 115
- S2 / CMV 140
- S2 / CMV 170
- Z4 / CMV 215


In the following you will find the technical specifications of the mounting flanges and auxiliary ports. They are clustered according to the standard and nominal sizes. First get an overview of the dimensions. Note the short designations such as „C4“ or „E4“. In the section [Model Code & Availability] you can then check the availability of the mounting flange as well as auxiliary ports and compile your desired configuration using the short designations as a segment of the model code.

## Dimensions - Back view

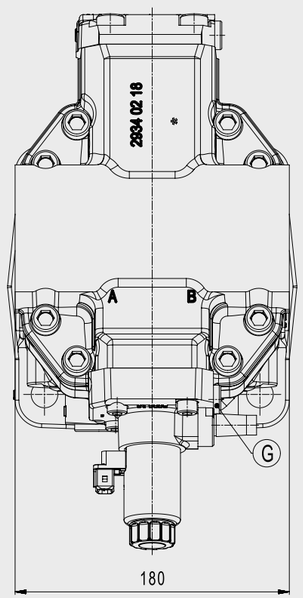


## Dimensions

| | | | |
|---|---|---|---|
| A | High pressure work port, ISO 6162-2, SAE 1“<br>If pressurised - motor runs clockwise<br>Nom. pres.: 450 bar, max. press.: 500 bar | AX<br>BX | Pressure equalization port |
| B | High pressure work port, ISO 6162-2, SAE 1“<br>If pressurised - motor runs counter-clockwise<br>Nom. pres.: 450 bar, max. press.: 500 bar | T1 | Drain / vent port, ISO 6149, M27x2, 19 mm deep |
| | | T2 | Drain / vent port, ISO 6149, M33x2, 19 mm deep |

| | | | |
|---|---|---|---|
| G | Ext. control pressure supply, ISO 6149, M14x1.5, 11.5 mm deep | | |
| U | Bearing flush port, ISO 6149, M18x1.5, 14.5 mm deep | | |
| Y1 | Measuring port, ISO 6149, M14x1.5, 11.5 mm deep | | |
| | | | |

# Technical Specification | Mounting Flanges Auxiliary Ports | ISO 3019-2 metric | **R4/CMV140**


OVERVIEW
- Key Facts

CONFIGURATION
- Modelcode & Availability

TECHNICAL SPECIFICATION
- General Technical Data
- Operating Parameters
- Controls
- Sensors
- Electric Interfaces
  - Connectors
- Mechanical Interfaces
  - Flanges
  - Shafts
- Hydraulical Interfaces
  - Work Ports
  - Auxiliary Ports
- Functions/Options

ISO 3019-1/ SAE J744
- C4 / CMV 60
- C2 / CMV 85
- D4 / CMV 115
- D4 / CMV 140
- D4 / CMV 170
- E4 / CMV 215

ISO 3019-2 metric
- M4 / CMV 60
- N4 / CMV 85
- P4 / CMV 115
- R4 / CMV 140
- R4 / CMV 170
- S4 / CMV 215

Plug-in, similar to ISO 3019-2
- P2 / CMV 60
- Y2 / CMV 85
- S2 / CMV 115
- S2 / CMV 140
- S2 / CMV 170
- Z4 / CMV 215


In the following you will find the technical specifications of the mounting flanges and auxiliary ports. They are clustered according to the standard and nominal sizes. First get an overview of the dimensions. Note the short designations such as „C4“ or „E4“. In the section [Model Code & Availability] you can then check the availability of the mounting flange as well as auxiliary ports and compile your desired configuration using the short designations as a segment of the model code.

## Dimensions - Top view

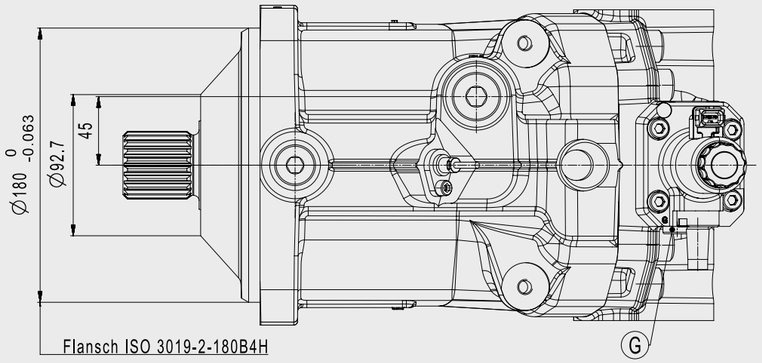


| | | | |
|---|---|---|---|
| A | High pressure work port, ISO 6162-2, SAE 1 1/4“<br>If pressurised - motor runs clockwise<br>Nom. pres.: 450 bar, max. press.: 500 bar | AX<br>BX | Pressure equalization port |
| B | High pressure work port, ISO 6162-2, SAE 1 1/4“<br>If pressurised - motor runs counter-clockwise<br>Nom. pres.: 450 bar, max. press.: 500 bar | T1 | Drain / vent port, ISO 6149, M27x2, 19 mm deep |
| | | T2 | Drain / vent port, ISO 6149, M33x2, 19 mm deep |

| | | | |
|---|---|---|---|
| G | Ext. control pressure supply, ISO 6149, M14x1.5, 11.5 mm deep | | |
| U | Bearing flush port, ISO 6149, M22x1.5, 15.5 mm deep | | |
| Y1 | Measuring port, ISO 6149, M14x1.5, 11.5 mm deep | | |
| | | | |

# Technical Specification | Mounting Flanges Auxiliary Ports | ISO 3019-2 metric | **R4/CMV140**


OVERVIEW
- Key Facts

CONFIGURATION
- Modelcode & Availability

TECHNICAL SPECIFICATION
- General Technical Data
- Operating Parameters
- Controls
- Sensors
- Electric Interfaces
  - Connectors
- Mechanical Interfaces
  - Flanges
  - Shafts
- Hydraulical Interfaces
  - Work Ports
  - Auxiliary Ports
- Functions/Options

ISO 3019-1/ SAE J744
- C4 / CMV 60
- C2 / CMV 85
- D4 / CMV 115
- D4 / CMV 140
- D4 / CMV 170
- E4 / CMV 215

ISO 3019-2 metric
- M4 / CMV 60
- N4 / CMV 85
- P4 / CMV 115
- R4 / CMV 140
- R4 / CMV 170
- S4 / CMV 215

Plug-in, similar to ISO 3019-2
- P2 / CMV 60
- Y2 / CMV 85
- S2 / CMV 115
- S2 / CMV 140
- S2 / CMV 170
- Z4 / CMV 215


In the following you will find the technical specifications of the mounting flanges and auxiliary ports. They are clustered according to the standard and nominal sizes. First get an overview of the dimensions. Note the short designations such as „C4“ or „E4“. In the section [Model Code & Availability] you can then check the availability of the mounting flange as well as auxiliary ports and compile your desired configuration using the short designations as a segment of the model code.

## Dimensions - Side view

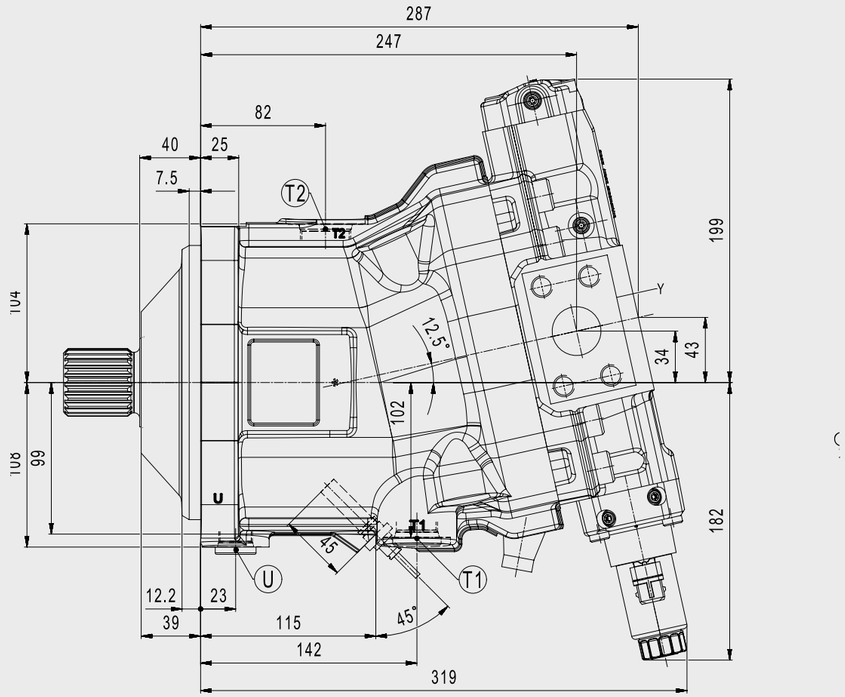


## Dimensions - Front view

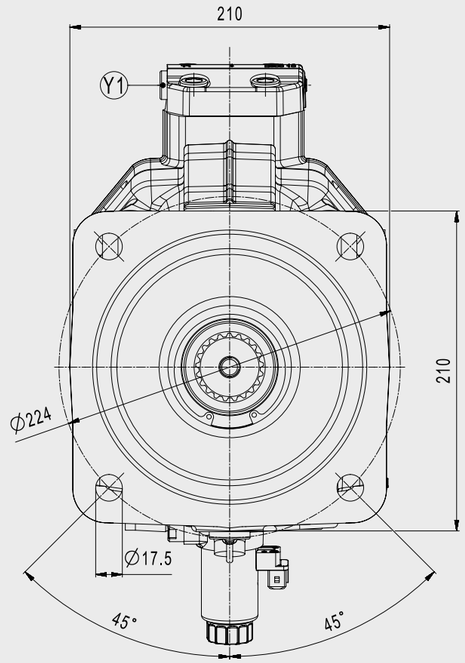


| | | | |
|---|---|---|---|
| A | High pressure work port, ISO 6162-2, SAE 1 1/4“<br>If pressurised - motor runs clockwise<br>Nom. pres.: 450 bar, max. press.: 500 bar | AX<br>BX | Pressure equalization port |
| B | High pressure work port, ISO 6162-2, SAE 1 1/4“<br>If pressurised - motor runs counter-clockwise<br>Nom. pres.: 450 bar, max. press.: 500 bar | T1 | Drain / vent port, ISO 6149, M27x2, 19 mm deep |
| | | T2 | Drain / vent port, ISO 6149, M33x2, 19 mm deep |

| | | | |
|---|---|---|---|
| G | Ext. control pressure supply, ISO 6149, M14x1.5, 11.5 mm deep | | |
| U | Bearing flush port, ISO 6149, M22x1.5, 15.5 mm deep | | |
| Y1 | Measuring port, ISO 6149, M14x1.5, 11.5 mm deep | | |
| | | | |

# Technical Specification | Mounting Flanges Auxiliary Ports | ISO 3019-2 metric | **R4/CMV140**


OVERVIEW
- Key Facts

CONFIGURATION
- Modelcode & Availability

TECHNICAL SPECIFICATION
- General Technical Data
- Operating Parameters
- Controls
- Sensors
- Electric Interfaces
  - Connectors
- Mechanical Interfaces
  - Flanges
  - Shafts
- Hydraulical Interfaces
  - Work Ports
  - Auxiliary Ports
- Functions/Options

ISO 3019-1/ SAE J744
- C4 / CMV 60
- C2 / CMV 85
- D4 / CMV 115
- D4 / CMV 140
- D4 / CMV 170
- E4 / CMV 215

ISO 3019-2 metric
- M4 / CMV 60
- N4 / CMV 85
- P4 / CMV 115
- R4 / CMV 140
- R4 / CMV 170
- S4 / CMV 215

Plug-in, similar to ISO 3019-2
- P2 / CMV 60
- Y2 / CMV 85
- S2 / CMV 115
- S2 / CMV 140
- S2 / CMV 170
- Z4 / CMV 215


In the following you will find the technical specifications of the mounting flanges and auxiliary ports. They are clustered according to the standard and nominal sizes. First get an overview of the dimensions. Note the short designations such as „C4“ or „E4“. In the section [Model Code & Availability] you can then check the availability of the mounting flange as well as auxiliary ports and compile your desired configuration using the short designations as a segment of the model code.

## Dimensions - Back view

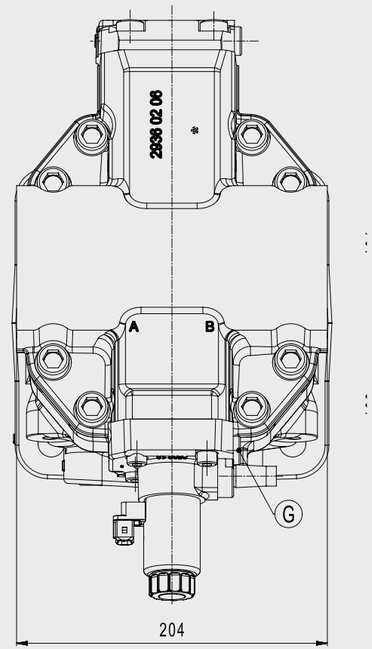


## Dimensions

| | | | |
|---|---|---|---|
| A | High pressure work port, ISO 6162-2, SAE 1 1/4“<br>If pressurised - motor runs clockwise<br>Nom. pres.: 450 bar, max. press.: 500 bar | AX<br>BX | Pressure equalization port |
| B | High pressure work port, ISO 6162-2, SAE 1 1/4“<br>If pressurised - motor runs counter-clockwise<br>Nom. pres.: 450 bar, max. press.: 500 bar | T1 | Drain / vent port, ISO 6149, M27x2, 19 mm deep |
| | | T2 | Drain / vent port, ISO 6149, M33x2, 19 mm deep |

| | | | |
|---|---|---|---|
| G | Ext. control pressure supply, ISO 6149, M14x1.5, 11.5 mm deep | | |
| U | Bearing flush port, ISO 6149, M22x1.5, 15.5 mm deep | | |
| Y1 | Measuring port, ISO 6149, M14x1.5, 11.5 mm deep | | |
| | | | |

OVERVIEW
- Key Facts

CONFIGURATION
- Modelcode & Availability

TECHNICAL SPECIFICATION
- General Technical Data
- Operating Parameters
- Controls
- Sensors
- Electric Interfaces
  - Connectors
- Mechanical Interfaces
  - Flanges
  - Shafts
- Hydraulical Interfaces
  - Work Ports
  - Auxiliary Ports
- Functions/Options

ISO 3019-1/ SAE J744
- C4 / CMV 60
- C2 / CMV 85
- D4 / CMV 115
- D4 / CMV 140
- D4 / CMV 170
- E4 / CMV 215

ISO 3019-2 metric
- M4 / CMV 60
- N4 / CMV 85
- P4 / CMV 115
- R4 / CMV 140
- R4 / CMV 170
- S4 / CMV 215

Plug-in, similar to ISO 3019-2
- P2 / CMV 60
- Y2 / CMV 85
- S2 / CMV 115
- S2 / CMV 140
- S2 / CMV 170
- Z4 / CMV 215


# Technical Specification | Mounting Flanges Auxiliary Ports | ISO 3019-2 metric | **R4/CMV170**

In the following you will find the technical specifications of the mounting flanges and auxiliary ports. They are clustered according to the standard and nominal sizes. First get an overview of the dimensions. Note the short designations such as „C4“ or „E4“. In the section [Model Code & Availability] you can then check the availability of the mounting flange as well as auxiliary ports and compile your desired configuration using the short designations as a segment of the model code.

## Dimensions - Top view

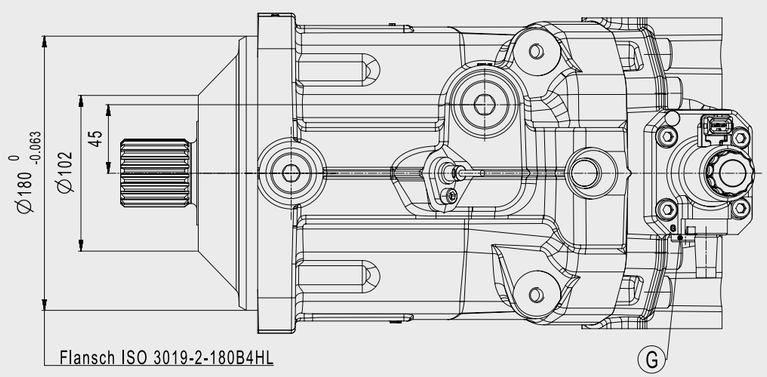


## Dimensions

| | | | |
|---|---|---|---|
| A | High pressure work port, ISO 6162-2, SAE 1 1/4“<br>If pressurised - motor runs clockwise<br>Nom. pres.: 450 bar, max. press.: 500 bar | AX<br>BX | Pressure equalization port, ISO 6149, M14x1.5, 11.5 mm deep |
| B | High pressure work port, ISO 6162-2, SAE 1 1/4“<br>If pressurised - motor runs counter-clockwise<br>Nom. pres.: 450 bar, max. press.: 500 bar | T1 | Drain / vent port, ISO 6149, M27x2, 19 mm deep |
| | | T2 | Drain / vent port, ISO 6149, M33x2, 19 mm deep |

| | | | |
|---|---|---|---|
| G | Ext. control pressure supply, ISO 6149, M14x1.5, 11.5 mm deep | | |
| U | Bearing flush port, ISO 6149, M22x1.5, 15.5 mm deep | | |
| Y1 | Measuring port, ISO 6149, M14x1.5, 11.5 mm deep | | |
| | | | |

# Technical Specification | Mounting Flanges Auxiliary Ports | ISO 3019-2 metric | **R4/CMV170**


OVERVIEW
- Key Facts

CONFIGURATION
- Modelcode & Availability

TECHNICAL SPECIFICATION
- General Technical Data
- Operating Parameters
- Controls
- Sensors
- Electric Interfaces
  - Connectors
- Mechanical Interfaces
  - Flanges
  - Shafts
- Hydraulical Interfaces
  - Work Ports
  - Auxiliary Ports
- Functions/Options

ISO 3019-1/ SAE J744
- C4 / CMV 60
- C2 / CMV 85
- D4 / CMV 115
- D4 / CMV 140
- D4 / CMV 170
- E4 / CMV 215

ISO 3019-2 metric
- M4 / CMV 60
- N4 / CMV 85
- P4 / CMV 115
- R4 / CMV 140
- R4 / CMV 170
- S4 / CMV 215

Plug-in, similar to ISO 3019-2
- P2 / CMV 60
- Y2 / CMV 85
- S2 / CMV 115
- S2 / CMV 140
- S2 / CMV 170
- Z4 / CMV 215


In the following you will find the technical specifications of the mounting flanges and auxiliary ports. They are clustered according to the standard and nominal sizes. First get an overview of the dimensions. Note the short designations such as „C4“ or „E4“. In the section [Model Code & Availability] you can then check the availability of the mounting flange as well as auxiliary ports and compile your desired configuration using the short designations as a segment of the model code.

## Dimensions - Side view

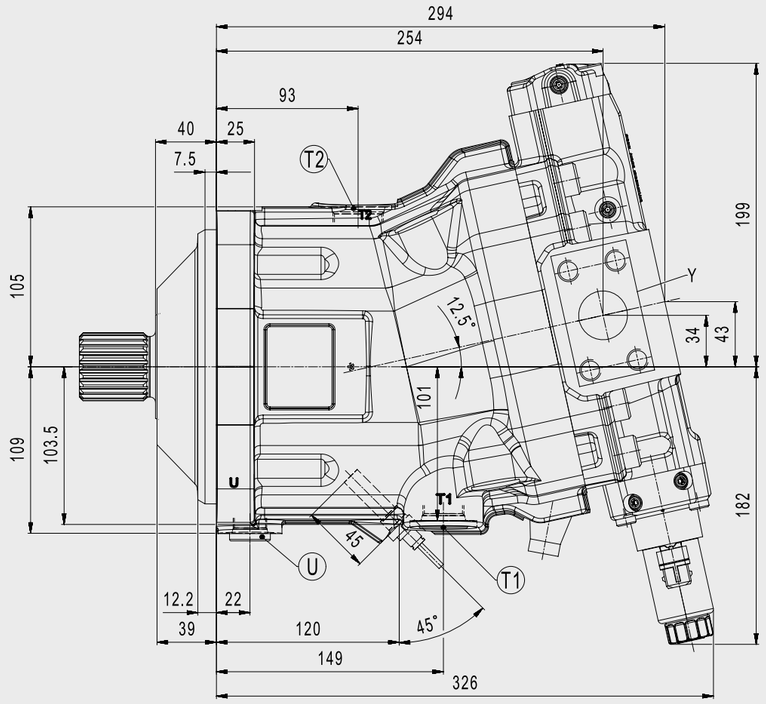


## Dimensions - Front view

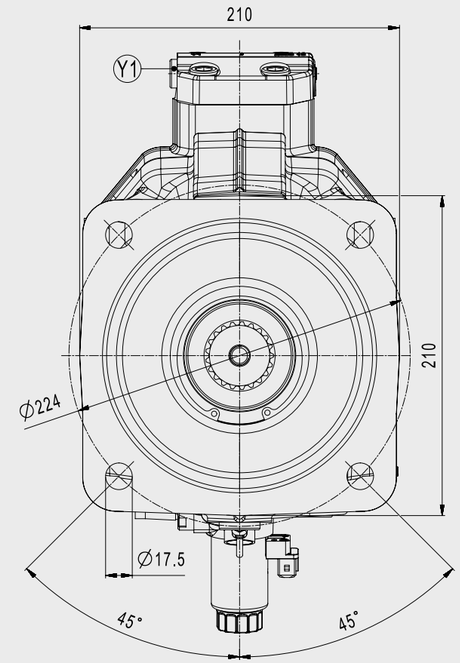


| | | | |
|---|---|---|---|
| A | High pressure work port, ISO 6162-2, SAE 1 1/4“<br>If pressurised - motor runs clockwise<br>Nom. pres.: 450 bar, max. press.: 500 bar | AX<br>BX | Pressure equalization port, ISO 6149, M14x1.5, 11.5 mm deep |
| B | High pressure work port, ISO 6162-2, SAE 1 1/4“<br>If pressurised - motor runs counter-clockwise<br>Nom. pres.: 450 bar, max. press.: 500 bar | T1<br>T2 | Drain / vent port, ISO 6149, M27x2, 19 mm deep<br>Drain / vent port, ISO 6149, M33x2, 19 mm deep |

| | | | |
|---|---|---|---|
| G | Ext. control pressure supply, ISO 6149, M14x1.5, 11.5 mm deep | | |
| U | Bearing flush port, ISO 6149, M22x1.5, 15.5 mm deep | | |
| Y1 | Measuring port, ISO 6149, M14x1.5, 11.5 mm deep | | |
| | | | |

# Technical Specification | Mounting Flanges Auxiliary Ports | ISO 3019-2 metric | **R4/CMV170**


OVERVIEW
- Key Facts

CONFIGURATION
- Modelcode & Availability

TECHNICAL SPECIFICATION
- General Technical Data
- Operating Parameters
- Controls
- Sensors
- Electric Interfaces
  - Connectors
- Mechanical Interfaces
  - Flanges
  - Shafts
- Hydraulical Interfaces
  - Work Ports
  - Auxiliary Ports
- Functions/Options

ISO 3019-1/ SAE J744
- C4 / CMV 60
- C2 / CMV 85
- D4 / CMV 115
- D4 / CMV 140
- D4 / CMV 170
- E4 / CMV 215

ISO 3019-2 metric
- M4 / CMV 60
- N4 / CMV 85
- P4 / CMV 115
- R4 / CMV 140
- R4 / CMV 170
- S4 / CMV 215

Plug-in, similar to ISO 3019-2
- P2 / CMV 60
- Y2 / CMV 85
- S2 / CMV 115
- S2 / CMV 140
- S2 / CMV 170
- Z4 / CMV 215


In the following you will find the technical specifications of the mounting flanges and auxiliary ports. They are clustered according to the standard and nominal sizes. First get an overview of the dimensions. Note the short designations such as „C4“ or „E4“. In the section [Model Code & Availability] you can then check the availability of the mounting flange as well as auxiliary ports and compile your desired configuration using the short designations as a segment of the model code.

## Dimensions - Back view

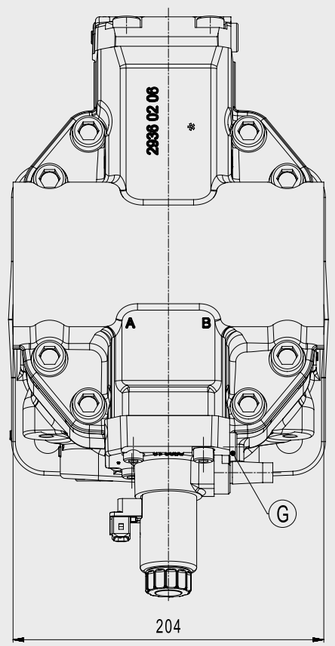


## Dimensions

| | | | | | | | |
|---|---|---|---|---|---|---|---|
| A | High pressure work port, ISO 6162-2, SAE 1 1/4“<br>If pressurised - motor runs clockwise<br>Nom. pres.: 450 bar, max. press.: 500 bar | AX | Pressure equalization port, ISO 6149, M14x1.5, 11.5 mm deep | G | Ext. control pressure supply, ISO 6149, M14x1.5, 11.5 mm deep | | |
| | | BX | | U | Bearing flush port, ISO 6149, M22x1.5, 15.5 mm deep | | |
| B | High pressure work port, ISO 6162-2, SAE 1 1/4“<br>If pressurised - motor runs counter-clockwise<br>Nom. pres.: 450 bar, max. press.: 500 bar | T1 | Drain / vent port, ISO 6149, M27x2, 19 mm deep | Y1 | Measuring port, ISO 6149, M14x1.5, 11.5 mm deep | | |
| | | T2 | Drain / vent port, ISO 6149, M33x2, 19 mm deep | | | | |

# Technical Specification | Mounting Flanges Auxiliary Ports | ISO 3019-2 metric | **S4/CMV215**

In the following you will find the technical specifications of the mounting flanges and auxiliary ports. They are clustered according to the standard and nominal sizes. First get an overview of the dimensions. Note the short designations such as „C4“ or „E4“. In the section [Model Code & Availability] you can then check the availability of the mounting flange as well as auxiliary ports and compile your desired configuration using the short designations as a segment of the model code.

## Dimensions - Top view

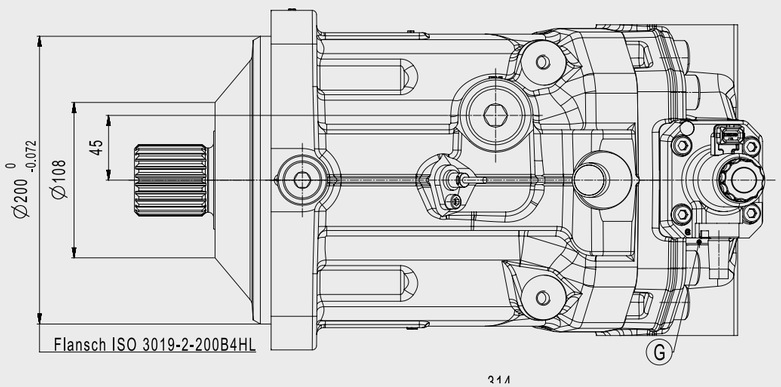


| | | | |
|---|---|---|---|
| A | High pressure work port, ISO 6162-2, SAE 1 1/4“<br>If pressurised - motor runs clockwise<br>Nom. pres.: 450 bar, max. press.: 500 bar | AX<br>BX | Pressure equalization port, ISO 6149, M22x1.5, 15.5 mm deep |
| B | High pressure work port, ISO 6162-2, SAE 1 1/4“<br>If pressurised - motor runs counter-clockwise<br>Nom. pres.: 450 bar, max. press.: 500 bar | T1 | Drain / vent port, ISO 6149, M33x2, 19 mm deep |
| | | T2 | Drain / vent port, ISO 6149, M42x2, 19.5 mm deep |

| | | | |
|---|---|---|---|
| G | Ext. control pressure supply, ISO 6149, M14x1.5, 11.5 mm deep | | |
| U | Bearing flush port, ISO 6149, M22x1.5, 15.5 mm deep | | |
| Y1 | Measuring port, ISO 6149, M14x1.5, 11.5 mm deep | | |
| | | | |

# Technical Specification | Mounting Flanges Auxiliary Ports | ISO 3019-2 metric | **S4/CMV215**


OVERVIEW
- Key Facts

CONFIGURATION
- Modelcode & Availability

TECHNICAL SPECIFICATION
- General Technical Data
- Operating Parameters
- Controls
- Sensors
- Electric Interfaces
  - Connectors
- Mechanical Interfaces
  - Flanges
  - Shafts
- Hydraulical Interfaces
  - Work Ports
  - Auxiliary Ports
- Functions/Options

ISO 3019-1/ SAE J744
- C4 / CMV 60
- C2 / CMV 85
- D4 / CMV 115
- D4 / CMV 140
- D4 / CMV 170
- E4 / CMV 215

ISO 3019-2 metric
- M4 / CMV 60
- N4 / CMV 85
- P4 / CMV 115
- R4 / CMV 140
- R4 / CMV 170
- S4 / CMV 215

Plug-in, similar to ISO 3019-2
- P2 / CMV 60
- Y2 / CMV 85
- S2 / CMV 115
- S2 / CMV 140
- S2 / CMV 170
- Z4 / CMV 215


In the following you will find the technical specifications of the mounting flanges and auxiliary ports. They are clustered according to the standard and nominal sizes. First get an overview of the dimensions. Note the short designations such as „C4“ or „E4“. In the section [Model Code & Availability] you can then check the availability of the mounting flange as well as auxiliary ports and compile your desired configuration using the short designations as a segment of the model code.

## Dimensions - Side view

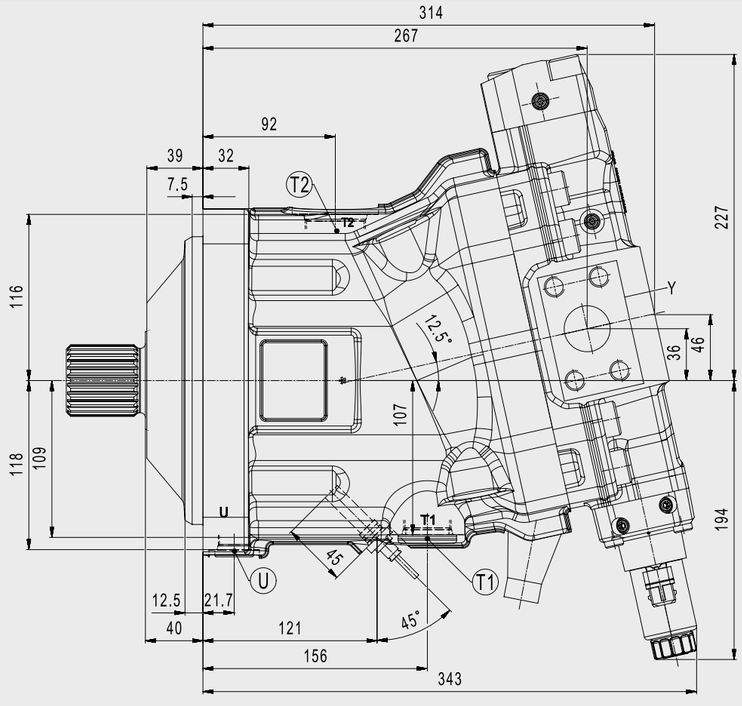


## Dimensions - Front view

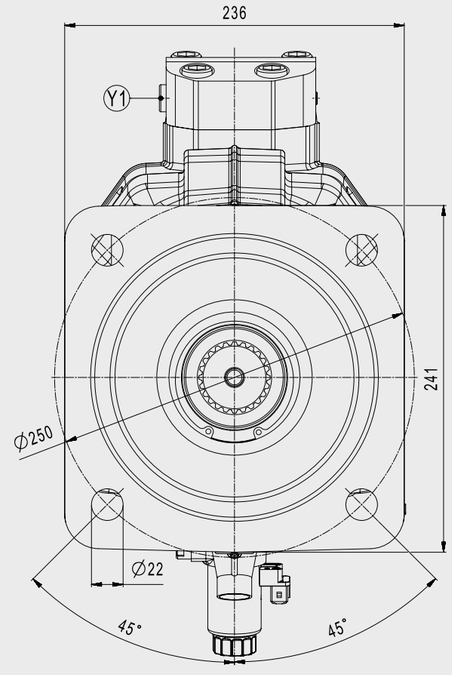


| | | | |
|---|---|---|---|
| A | High pressure work port, ISO 6162-2, SAE 1 1/4“<br>If pressurised - motor runs clockwise<br>Nom. pres.: 450 bar, max. press.: 500 bar | AX<br>BX | Pressure equalization port, ISO 6149, M22x1.5, 15.5 mm deep |
| B | High pressure work port, ISO 6162-2, SAE 1 1/4“<br>If pressurised - motor runs counter-clockwise<br>Nom. pres.: 450 bar, max. press.: 500 bar | T1 | Drain / vent port, ISO 6149, M33x2, 19 mm deep |
| | | T2 | Drain / vent port, ISO 6149, M42x2, 19.5 mm deep |

| | | | |
|---|---|---|---|
| G | Ext. control pressure supply, ISO 6149, M14x1.5, 11.5 mm deep | | |
| U | Bearing flush port, ISO 6149, M22x1.5, 15.5 mm deep | | |
| Y1 | Measuring port, ISO 6149, M14x1.5, 11.5 mm deep | | |
| | | | |

# Technical Specification | Mounting Flanges Auxiliary Ports | ISO 3019-2 metric | **S4/CMV215**


OVERVIEW
- Key Facts

CONFIGURATION
- Modelcode & Availability

TECHNICAL SPECIFICATION
- General Technical Data
- Operating Parameters
- Controls
- Sensors
- Electric Interfaces
  - Connectors
- Mechanical Interfaces
  - Flanges
  - Shafts
- Hydraulical Interfaces
  - Work Ports
  - Auxiliary Ports
- Functions/Options

ISO 3019-1/ SAE J744
- C4 / CMV 60
- C2 / CMV 85
- D4 / CMV 115
- D4 / CMV 140
- D4 / CMV 170
- E4 / CMV 215

ISO 3019-2 metric
- M4 / CMV 60
- N4 / CMV 85
- P4 / CMV 115
- R4 / CMV 140
- R4 / CMV 170
- S4 / CMV 215

Plug-in, similar to ISO 3019-2
- P2 / CMV 60
- Y2 / CMV 85
- S2 / CMV 115
- S2 / CMV 140
- S2 / CMV 170
- Z4 / CMV 215


In the following you will find the technical specifications of the mounting flanges and auxiliary ports. They are clustered according to the standard and nominal sizes. First get an overview of the dimensions. Note the short designations such as „C4“ or „E4“. In the section [Model Code & Availability] you can then check the availability of the mounting flange as well as auxiliary ports and compile your desired configuration using the short designations as a segment of the model code.

## Dimensions - Back view

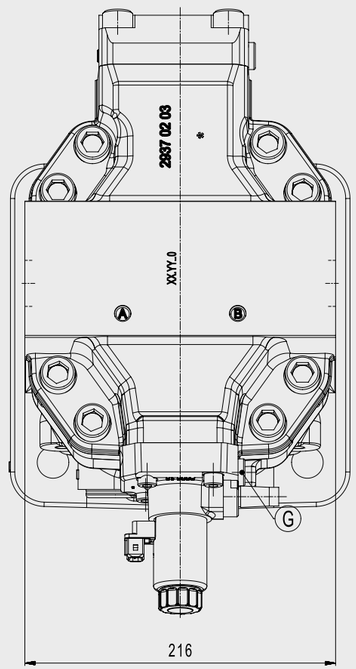


| | | | |
|---|---|---|---|
| A | High pressure work port, ISO 6162-2, SAE 1 1/4“<br>If pressurised - motor runs clockwise<br>Nom. pres.: 450 bar, max. press.: 500 bar | AX<br>BX | Pressure equalization port, ISO 6149, M22x1.5, 15.5 mm deep |
| B | High pressure work port, ISO 6162-2, SAE 1 1/4“<br>If pressurised - motor runs counter-clockwise<br>Nom. pres.: 450 bar, max. press.: 500 bar | T1 | Drain / vent port, ISO 6149, M33x2, 19 mm deep |
| | | T2 | Drain / vent port, ISO 6149, M42x2, 19.5 mm deep |

## Dimensions

| | | | |
|---|---|---|---|
| G | Ext. control pressure supply, ISO 6149, M14x1.5, 11.5 mm deep | | |
| U | Bearing flush port, ISO 6149, M22x1.5, 15.5 mm deep | | |
| Y1 | Measuring port, ISO 6149, M14x1.5, 11.5 mm deep | | |
| | | | |

# Technical Specification | Mounting Flanges Auxiliary Ports | Plug-in, similar to ISO 3019-2 | **P2/CMV60**


OVERVIEW
- Key Facts

CONFIGURATION
- Modelcode & Availability

TECHNICAL SPECIFICATION
- General Technical Data
- Operating Parameters
- Controls
- Sensors
- Electric Interfaces
  - Connectors
- Mechanical Interfaces
  - Flanges
  - Shafts
- Hydraulical Interfaces
  - Work Ports
  - Auxiliary Ports
- Functions/Options

ISO 3019-1/ SAE J744
- C4 / CMV 60
- C2 / CMV 85
- D4 / CMV 115
- D4 / CMV 140
- D4 / CMV 170
- E4 / CMV 215

ISO 3019-2 metric
- M4 / CMV 60
- N4 / CMV 85
- P4 / CMV 115
- R4 / CMV 140
- R4 / CMV 170
- S4 / CMV 215

Plug-in, similar to ISO 3019-2
- P2 / CMV 60
- Y2 / CMV 85
- S2 / CMV 115
- S2 / CMV 140
- S2 / CMV 170
- Z4 / CMV 215


In the following you will find the technical specifications of the mounting flanges and auxiliary ports. They are clustered according to the standard and nominal sizes. First get an overview of the dimensions. Note the short designations such as „C4“ or „E4“. In the section [Model Code & Availability] you can then check the availability of the mounting flange as well as auxiliary ports and compile your desired configuration using the short designations as a segment of the model code.

## Dimensions - Top view

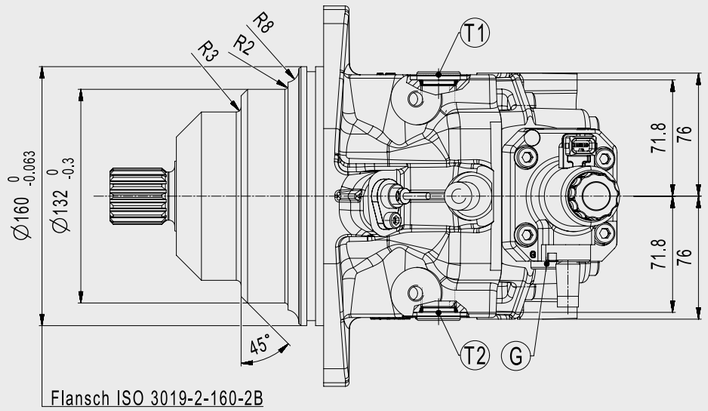


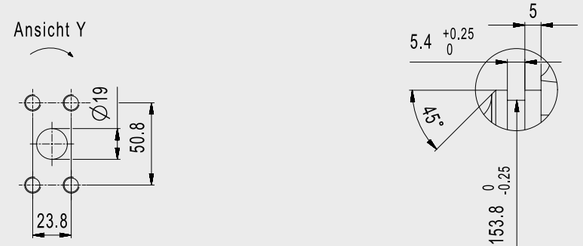


| | | | |
|---|---|---|---|
| A | High pressure work port, ISO 6162-2,<br>If pressurised - motor runs clockwise<br>Nom. pres.: 450 bar, max. press.: 500 bar | AX<br>BX | Pressure equalization port |
| B | High pressure work port, ISO 6162-2,<br>If pressurised - motor runs counter-clockwise<br>Nom. pres.: 450 bar, max. press.: 500 bar | T1 | Drain / vent port, ISO 6149 |
| | | T2 | Drain / vent port, ISO 6149 |

| | | | |
|---|---|---|---|
| G | Ext. control pressure supply, ISO 6149 | | |
| U | Bearing flush port, ISO 6149 | | |
| Y1 | Measuring port, ISO 6149 | | |
| | | | |

# Technical Specification | Mounting Flanges Auxiliary Ports | Plug-in, similar to ISO 3019-2 | **P2/CMV60**

In the following you will find the technical specifications of the mounting flanges and auxiliary ports. They are clustered according to the standard and nominal sizes. First get an overview of the dimensions. Note the short designations such as „C4“ or „E4“. In the section [Model Code & Availability] you can then check the availability of the mounting flange as well as auxiliary ports and compile your desired configuration using the short designations as a segment of the model code.

## Dimensions - Side view

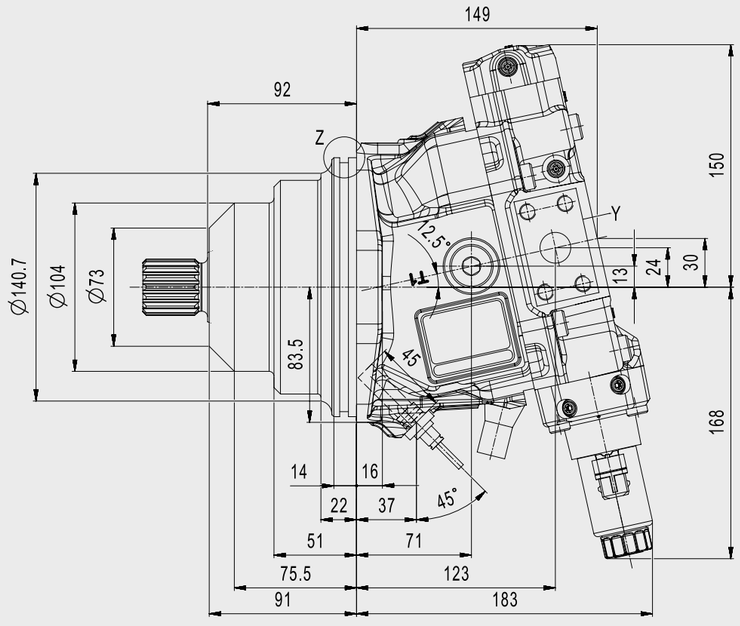


## Dimensions - Front view

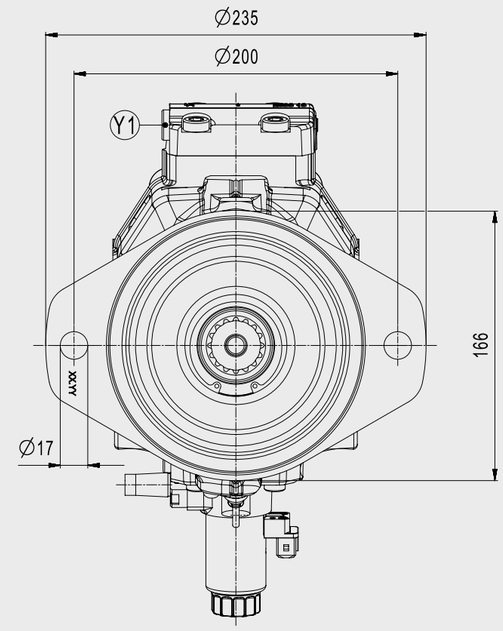


| | | | |
|---|---|---|---|
| A | High pressure work port, ISO 6162-2,<br>If pressurised - motor runs clockwise<br>Nom. pres.: 450 bar, max. press.: 500 bar | AX | Pressure equalization port |
| | | BX | |
| B | High pressure work port, ISO 6162-2,<br>If pressurised - motor runs counter-clockwise<br>Nom. pres.: 450 bar, max. press.: 500 bar | T1 | Drain / vent port, ISO 6149 |
| | | T2 | Drain / vent port, ISO 6149 |

| | | | |
|---|---|---|---|
| G | Ext. control pressure supply, ISO 6149 | | |
| U | Bearing flush port, ISO 6149 | | |
| Y1 | Measuring port, ISO 6149 | | |
| | | | |

# Technical Specification | Mounting Flanges Auxiliary Ports | Plug-in, similar to ISO 3019-2 | **Y2/CMV85**


OVERVIEW
- Key Facts

CONFIGURATION
- Modelcode & Availability

TECHNICAL SPECIFICATION
- General Technical Data
- Operating Parameters
- Controls
- Sensors
- Electric Interfaces
  - Connectors
- Mechanical Interfaces
  - Flanges
  - Shafts
- Hydraulical Interfaces
  - Work Ports
  - Auxiliary Ports
- Functions/Options

ISO 3019-1/ SAE J744
- C4 / CMV 60
- C2 / CMV 85
- D4 / CMV 115
- D4 / CMV 140
- D4 / CMV 170
- E4 / CMV 215

ISO 3019-2 metric
- M4 / CMV 60
- N4 / CMV 85
- P4 / CMV 115
- R4 / CMV 140
- R4 / CMV 170
- S4 / CMV 215

Plug-in, similar to ISO 3019-2
- P2 / CMV 60
- Y2 / CMV 85
- S2 / CMV 115
- S2 / CMV 140
- S2 / CMV 170
- Z4 / CMV 215


In the following you will find the technical specifications of the mounting flanges and auxiliary ports. They are clustered according to the standard and nominal sizes. First get an overview of the dimensions. Note the short designations such as „C4“ or „E4“. In the section [Model Code & Availability] you can then check the availability of the mounting flange as well as auxiliary ports and compile your desired configuration using the short designations as a segment of the model code.

## Dimensions - Top view

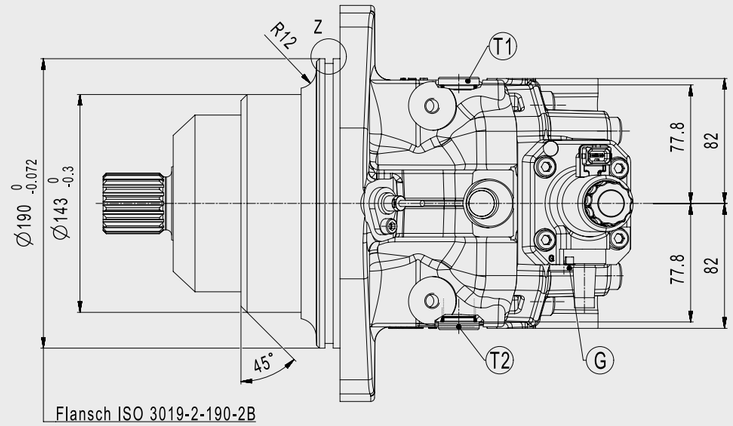


## Dimensions

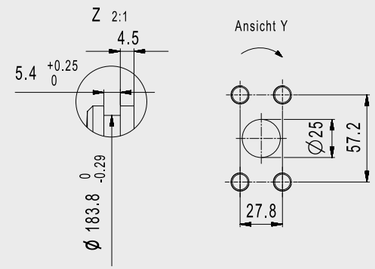


| | | | |
|---|---|---|---|
| A | High pressure work port, ISO 6162-2, SAE 1“<br>If pressurised - motor runs clockwise<br>Nom. pres.: 450 bar, max. press.: 500 bar | AX<br>BX | Pressure equalization port |
| B | High pressure work port, ISO 6162-2, SAE 1“<br>If pressurised - motor runs counter-clockwise<br>Nom. pres.: 450 bar, max. press.: 500 bar | T1 | Drain / vent port, ISO 6149, M22x1.5, 15.5 mm deep |
| | | T2 | Drain / vent port, ISO 6149, M27x2, 19 mm deep |

| | | | |
|---|---|---|---|
| G | Ext. control pressure supply, ISO 6149, M14x1.5, 11.5 mm deep | | |
| U | Bearing flush port, ISO 6149, M18x1.5, 14.5 mm deep | | |
| Y1 | Measuring port, ISO 6149, M14x1.5, 11.5 mm deep | | |
| | | | |

# Technical Specification | Mounting Flanges Auxiliary Ports | Plug-in, similar to ISO 3019-2 | **Y2/CMV85**


OVERVIEW
- Key Facts

CONFIGURATION
- Modelcode & Availability

TECHNICAL SPECIFICATION
- General Technical Data
- Operating Parameters
- Controls
- Sensors
- Electric Interfaces
  - Connectors
- Mechanical Interfaces
  - Flanges
  - Shafts
- Hydraulical Interfaces
  - Work Ports
  - Auxiliary Ports
- Functions/Options

ISO 3019-1/ SAE J744
- C4 / CMV 60
- C2 / CMV 85
- D4 / CMV 115
- D4 / CMV 140
- D4 / CMV 170
- E4 / CMV 215

ISO 3019-2 metric
- M4 / CMV 60
- N4 / CMV 85
- P4 / CMV 115
- R4 / CMV 140
- R4 / CMV 170
- S4 / CMV 215

Plug-in, similar to ISO 3019-2
- P2 / CMV 60
- Y2 / CMV 85
- S2 / CMV 115
- S2 / CMV 140
- S2 / CMV 170
- Z4 / CMV 215


In the following you will find the technical specifications of the mounting flanges and auxiliary ports. They are clustered according to the standard and nominal sizes. First get an overview of the dimensions. Note the short designations such as „C4“ or „E4“. In the section [Model Code & Availability] you can then check the availability of the mounting flange as well as auxiliary ports and compile your desired configuration using the short designations as a segment of the model code.

## Dimensions - Side view

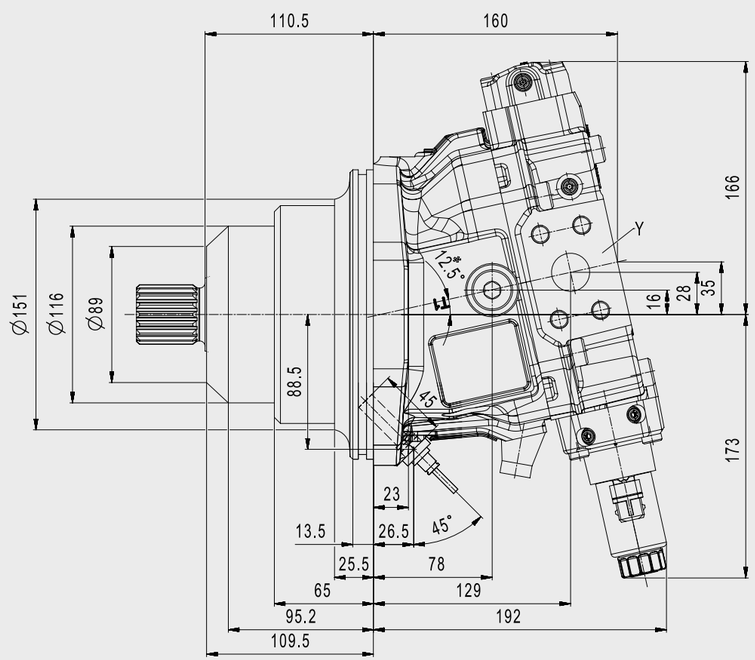


## Dimensions - Front view

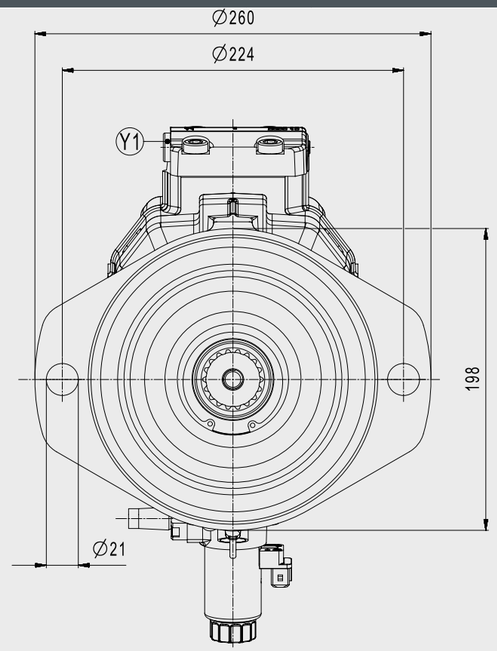


| | | | |
|---|---|---|---|
| A | High pressure work port, ISO 6162-2, SAE 1“<br>If pressurised - motor runs clockwise<br>Nom. pres.: 450 bar, max. press.: 500 bar | AX<br>BX | Pressure equalization port |
| B | High pressure work port, ISO 6162-2, SAE 1“<br>If pressurised - motor runs counter-clockwise<br>Nom. pres.: 450 bar, max. press.: 500 bar | T1 | Drain / vent port, ISO 6149, M22x1.5, 15.5 mm deep |
| | | T2 | Drain / vent port, ISO 6149, M27x2, 19 mm deep |

| | | | |
|---|---|---|---|
| G | Ext. control pressure supply, ISO 6149, M14x1.5, 11.5 mm deep | | |
| U | Bearing flush port, ISO 6149, M18x1.5, 14.5 mm deep | | |
| Y1 | Measuring port, ISO 6149, M14x1.5, 11.5 mm deep | | |
| | | | |

# Technical Specification | Mounting Flanges Auxiliary Ports | Plug-in, similar to ISO 3019-2 | **S2/CMV115**


OVERVIEW
- Key Facts

CONFIGURATION
- Modelcode & Availability

TECHNICAL SPECIFICATION
- General Technical Data
- Operating Parameters
- Controls
- Sensors
- Electric Interfaces
  - Connectors
- Mechanical Interfaces
  - Flanges
  - Shafts
- Hydraulical Interfaces
  - Work Ports
  - Auxiliary Ports
- Functions/Options

ISO 3019-1/ SAE J744
- C4 / CMV 60
- C2 / CMV 85
- D4 / CMV 115
- D4 / CMV 140
- D4 / CMV 170
- E4 / CMV 215

ISO 3019-2 metric
- M4 / CMV 60
- N4 / CMV 85
- P4 / CMV 115
- R4 / CMV 140
- R4 / CMV 170
- S4 / CMV 215

Plug-in, similar to ISO 3019-2
- P2 / CMV 60
- Y2 / CMV 85
- S2 / CMV 115
- S2 / CMV 140
- S2 / CMV 170
- Z4 / CMV 215


In the following you will find the technical specifications of the mounting flanges and auxiliary ports. They are clustered according to the standard and nominal sizes. First get an overview of the dimensions. Note the short designations such as „C4“ or „E4“. In the section [Model Code & Availability] you can then check the availability of the mounting flange as well as auxiliary ports and compile your desired configuration using the short designations as a segment of the model code.

## Dimensions - Top view

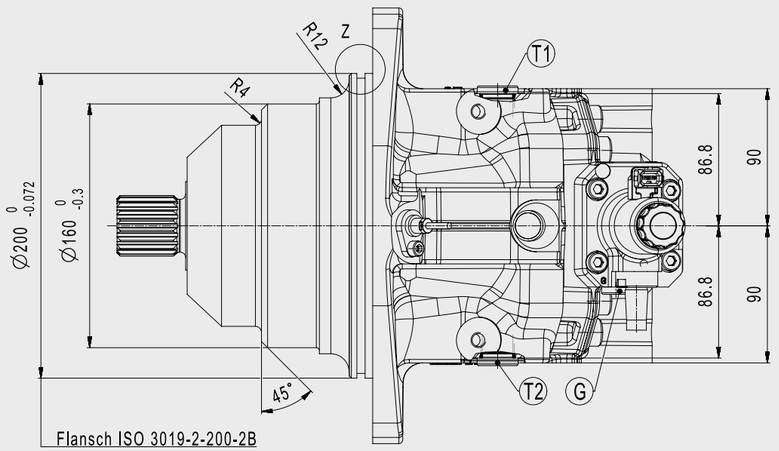


## Dimensions

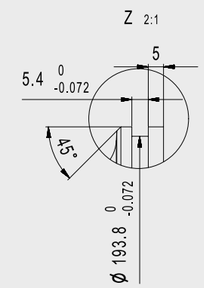


| | | | |
|---|---|---|---|
| A | High pressure work port, ISO 6162-2, SAE 1“<br>If pressurised - motor runs clockwise<br>Nom. pres.: 450 bar, max. press.: 500 bar | AX<br>BX | Pressure equalization port |
| B | High pressure work port, ISO 6162-2, SAE 1“<br>If pressurised - motor runs counter-clockwise<br>Nom. pres.: 450 bar, max. press.: 500 bar | T1 | Drain / vent port, ISO 6149, M27x2, 19 mm deep |
| | | T2 | Drain / vent port, ISO 6149, M33x2, 19 mm deep |

| | | | |
|---|---|---|---|
| G | Ext. control pressure supply, ISO 6149, M14x1.5, 11.5 mm deep | | |
| U | Bearing flush port, ISO 6149, M18x1.5, 14.5 mm deep | | |
| Y1 | Measuring port, ISO 6149, M14x1.5, 11.5 mm deep | | |
| | | | |

# Technical Specification | Mounting Flanges Auxiliary Ports | Plug-in, similar to ISO 3019-2 | **S2/CMV115**


OVERVIEW
- Key Facts

CONFIGURATION
- Modelcode & Availability

TECHNICAL SPECIFICATION
- General Technical Data
- Operating Parameters
- Controls
- Sensors
- Electric Interfaces
  - Connectors
- Mechanical Interfaces
  - Flanges
  - Shafts
- Hydraulical Interfaces
  - Work Ports
  - Auxiliary Ports
- Functions/Options

ISO 3019-1/ SAE J744
- C4 / CMV 60
- C2 / CMV 85
- D4 / CMV 115
- D4 / CMV 140
- D4 / CMV 170
- E4 / CMV 215

ISO 3019-2 metric
- M4 / CMV 60
- N4 / CMV 85
- P4 / CMV 115
- R4 / CMV 140
- R4 / CMV 170
- S4 / CMV 215

Plug-in, similar to ISO 3019-2
- P2 / CMV 60
- Y2 / CMV 85
- S2 / CMV 115
- S2 / CMV 140
- S2 / CMV 170
- Z4 / CMV 215


In the following you will find the technical specifications of the mounting flanges and auxiliary ports. They are clustered according to the standard and nominal sizes. First get an overview of the dimensions. Note the short designations such as „C4“ or „E4“. In the section [Model Code & Availability] you can then check the availability of the mounting flange as well as auxiliary ports and compile your desired configuration using the short designations as a segment of the model code.

## Dimensions - Side view

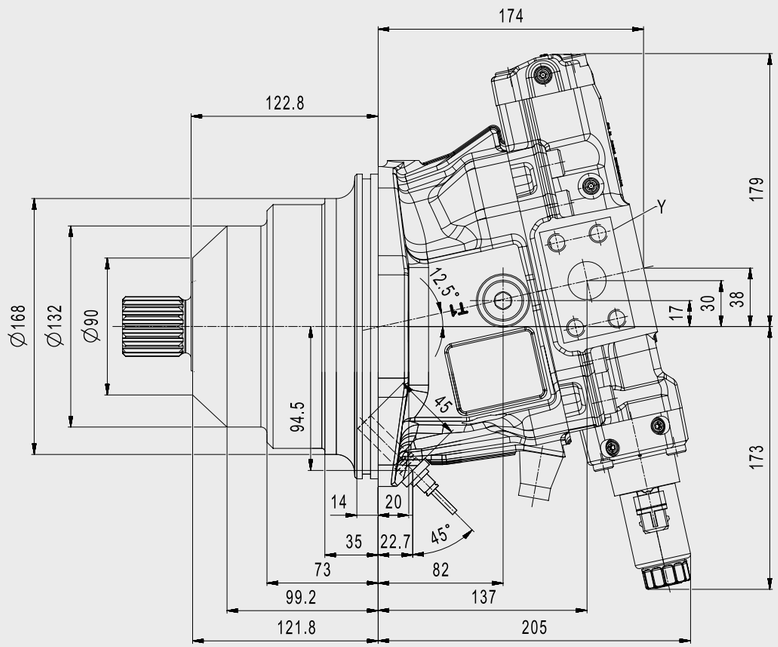


## Dimensions - Front view

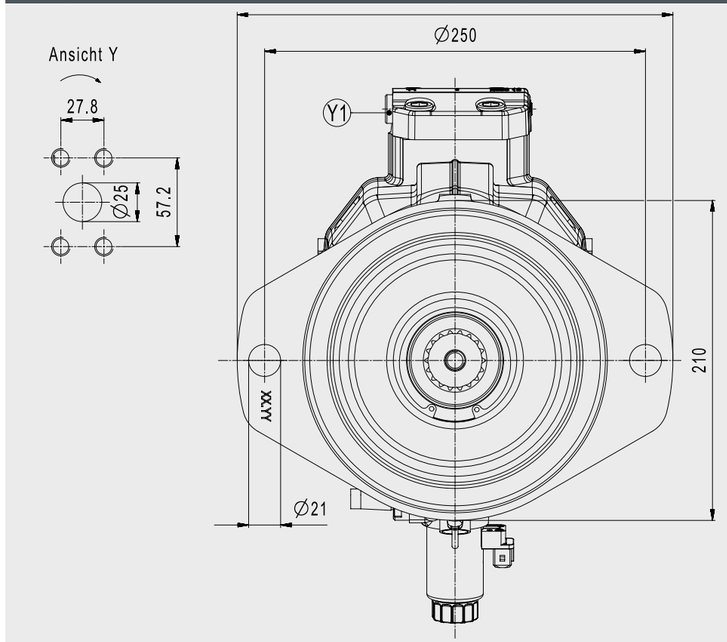


| | | | |
|---|---|---|---|
| A | High pressure work port, ISO 6162-2, SAE 1“<br>If pressurised - motor runs clockwise<br>Nom. pres.: 450 bar, max. press.: 500 bar | AX<br>BX | Pressure equalization port |
| B | High pressure work port, ISO 6162-2, SAE 1“<br>If pressurised - motor runs counter-clockwise<br>Nom. pres.: 450 bar, max. press.: 500 bar | T1 | Drain / vent port, ISO 6149, M27x2, 19 mm deep |
| | | T2 | Drain / vent port, ISO 6149, M33x2, 19 mm deep |

| | | | |
|---|---|---|---|
| G | Ext. control pressure supply, ISO 6149, M14x1.5, 11.5 mm deep | | |
| U | Bearing flush port, ISO 6149, M18x1.5, 14.5 mm deep | | |
| Y1 | Measuring port, ISO 6149, M14x1.5, 11.5 mm deep | | |
| | | | |

# Technical Specification | Mounting Flanges Auxiliary Ports | Plug-in, similar to ISO 3019-2 | **S2/CMV140**


OVERVIEW
- Key Facts

CONFIGURATION
- Modelcode & Availability

TECHNICAL SPECIFICATION
- General Technical Data
- Operating Parameters
- Controls
- Sensors
- Electric Interfaces
  - Connectors
- Mechanical Interfaces
  - Flanges
  - Shafts
- Hydraulical Interfaces
  - Work Ports
  - Auxiliary Ports
- Functions/Options

ISO 3019-1/ SAE J744
- C4 / CMV 60
- C2 / CMV 85
- D4 / CMV 115
- D4 / CMV 140
- D4 / CMV 170
- E4 / CMV 215

ISO 3019-2 metric
- M4 / CMV 60
- N4 / CMV 85
- P4 / CMV 115
- R4 / CMV 140
- R4 / CMV 170
- S4 / CMV 215

Plug-in, similar to ISO 3019-2
- P2 / CMV 60
- Y2 / CMV 85
- S2 / CMV 115
- S2 / CMV 140
- S2 / CMV 170
- Z4 / CMV 215


In the following you will find the technical specifications of the mounting flanges and auxiliary ports. They are clustered according to the standard and nominal sizes. First get an overview of the dimensions. Note the short designations such as „C4“ or „E4“. In the section [Model Code & Availability] you can then check the availability of the mounting flange as well as auxiliary ports and compile your desired configuration using the short designations as a segment of the model code.

## Dimensions - Top view

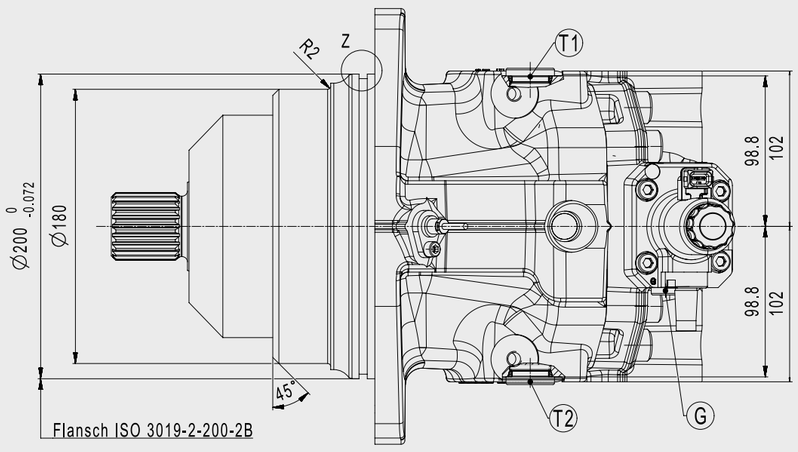


## Dimensions

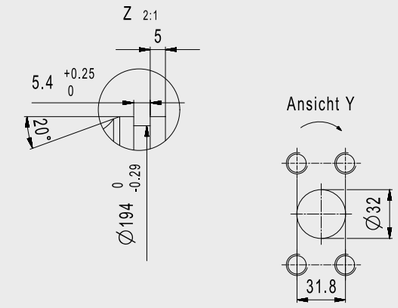


| | | | |
|---|---|---|---|
| A | High pressure work port, ISO 6162-2, SAE 1 1/4“<br>If pressurised - motor runs clockwise<br>Nom. pres.: 450 bar, max. press.: 500 bar | AX | Pressure equalization port |
| | | BX | |
| B | High pressure work port, ISO 6162-2, SAE 1 1/4“<br>If pressurised - motor runs counter-clockwise<br>Nom. pres.: 450 bar, max. press.: 500 bar | T1 | Drain / vent port, ISO 6149, M27x2, 19 mm deep |
| | | T2 | Drain / vent port, ISO 6149, M33x2, 19 mm deep |

| | | | |
|---|---|---|---|
| G | Ext. control pressure supply, ISO 6149, M14x1.5, 11.5 mm deep | | |
| U | Bearing flush port, ISO 6149, M22x1.5, 15.5 mm deep | | |
| Y1 | Measuring port, ISO 6149, M14x1.5, 11.5 mm deep | | |
| | | | |

# Technical Specification | Mounting Flanges Auxiliary Ports | Plug-in, similar to ISO 3019-2 | **S2/CMV140**


OVERVIEW
- Key Facts

CONFIGURATION
- Modelcode & Availability

TECHNICAL SPECIFICATION
- General Technical Data
- Operating Parameters
- Controls
- Sensors
- Electric Interfaces
  - Connectors
- Mechanical Interfaces
  - Flanges
  - Shafts
- Hydraulical Interfaces
  - Work Ports
  - Auxiliary Ports
- Functions/Options

ISO 3019-1/ SAE J744
- C4 / CMV 60
- C2 / CMV 85
- D4 / CMV 115
- D4 / CMV 140
- D4 / CMV 170
- E4 / CMV 215

ISO 3019-2 metric
- M4 / CMV 60
- N4 / CMV 85
- P4 / CMV 115
- R4 / CMV 140
- R4 / CMV 170
- S4 / CMV 215

Plug-in, similar to ISO 3019-2
- P2 / CMV 60
- Y2 / CMV 85
- S2 / CMV 115
- S2 / CMV 140
- S2 / CMV 170
- Z4 / CMV 215


In the following you will find the technical specifications of the mounting flanges and auxiliary ports. They are clustered according to the standard and nominal sizes. First get an overview of the dimensions. Note the short designations such as „C4“ or „E4“. In the section [Model Code & Availability] you can then check the availability of the mounting flange as well as auxiliary ports and compile your desired configuration using the short designations as a segment of the model code.

## Dimensions - Top view

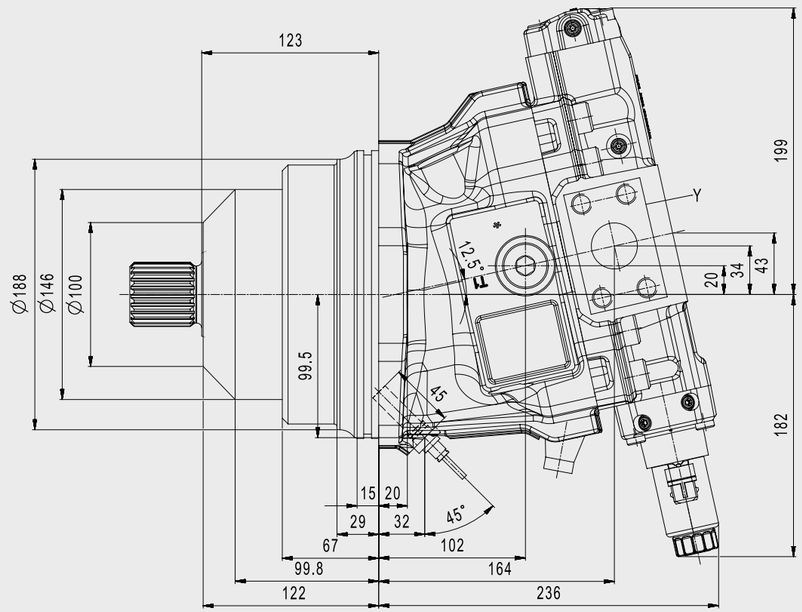


## Dimensions

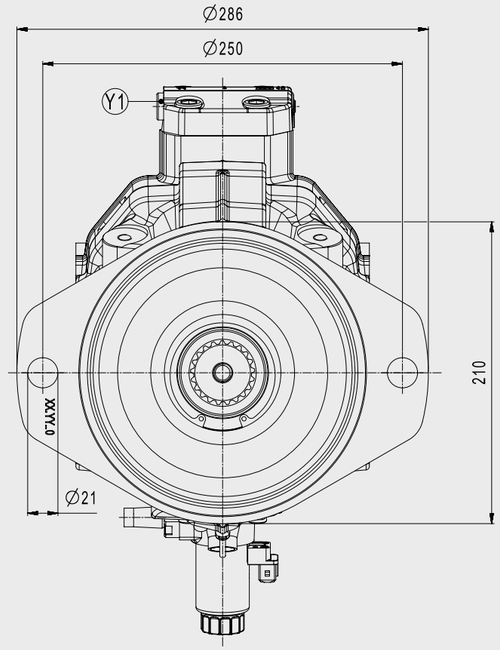


| | | | |
|---|---|---|---|
| A | High pressure work port, ISO 6162-2, SAE 1 1/4“<br>If pressurised - motor runs clockwise<br>Nom. pres.: 450 bar, max. press.: 500 bar | AX<br>BX | Pressure equalization port |
| B | High pressure work port, ISO 6162-2, SAE 1 1/4“<br>If pressurised - motor runs counter-clockwise<br>Nom. pres.: 450 bar, max. press.: 500 bar | T1<br>T2 | Drain / vent port, ISO 6149, M27x2, 19 mm deep<br>Drain / vent port, ISO 6149, M33x2, 19 mm deep |

| | | | |
|---|---|---|---|
| G | Ext. control pressure supply, ISO 6149, M14x1.5, 11.5 mm deep | | |
| U | Bearing flush port, ISO 6149, M22x1.5, 15.5 mm deep | | |
| Y1 | Measuring port, ISO 6149, M14x1.5, 11.5 mm deep | | |
| | | | |

# Technical Specification | Mounting Flanges Auxiliary Ports | Plug-in, similar to ISO 3019-2 | **S2/CMV170**


OVERVIEW
- Key Facts

CONFIGURATION
- Modelcode & Availability

TECHNICAL SPECIFICATION
- General Technical Data
- Operating Parameters
- Controls
- Sensors
- Electric Interfaces
  - Connectors
- Mechanical Interfaces
  - Flanges
  - Shafts
- Hydraulical Interfaces
  - Work Ports
  - Auxiliary Ports
- Functions/Options

ISO 3019-1/ SAE J744
- C4 / CMV 60
- C2 / CMV 85
- D4 / CMV 115
- D4 / CMV 140
- D4 / CMV 170
- E4 / CMV 215

ISO 3019-2 metric
- M4 / CMV 60
- N4 / CMV 85
- P4 / CMV 115
- R4 / CMV 140
- R4 / CMV 170
- S4 / CMV 215

Plug-in, similar to ISO 3019-2
- P2 / CMV 60
- Y2 / CMV 85
- S2 / CMV 115
- S2 / CMV 140
- S2 / CMV 170
- Z4 / CMV 215


In the following you will find the technical specifications of the mounting flanges and auxiliary ports. They are clustered according to the standard and nominal sizes. First get an overview of the dimensions. Note the short designations such as „C4“ or „E4“. In the section [Model Code & Availability] you can then check the availability of the mounting flange as well as auxiliary ports and compile your desired configuration using the short designations as a segment of the model code.

## Dimensions - Top view

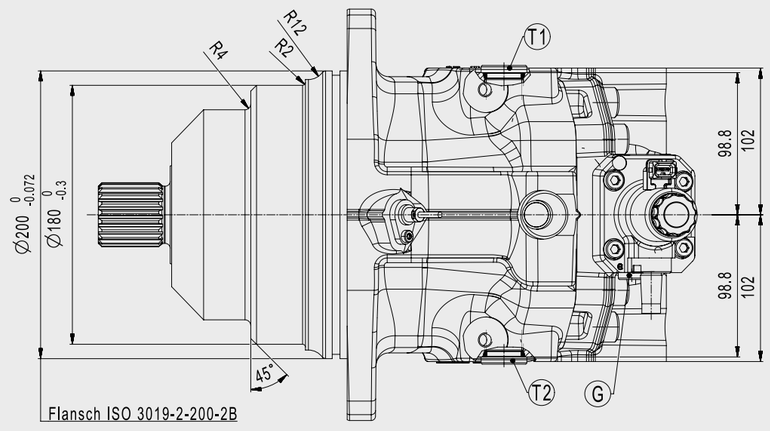


| | | | |
|---|---|---|---|
| A | High pressure work port, ISO 6162-2, SAE 1 1/4“<br>If pressurised - motor runs clockwise<br>Nom. pres.: 450 bar, max. press.: 500 bar | AX<br>BX | Pressure equalization port, ISO 6149, M14x1.5, 11.5 mm deep |
| B | High pressure work port, ISO 6162-2, SAE 1 1/4“<br>If pressurised - motor runs counter-clockwise<br>Nom. pres.: 450 bar, max. press.: 500 bar | T1 | Drain / vent port, ISO 6149, M27x2, 19 mm deep |
| | | T2 | Drain / vent port, ISO 6149, M33x2, 19 mm deep |

| | | | |
|---|---|---|---|
| G | Ext. control pressure supply, ISO 6149, M14x1.5, 11.5 mm deep | | |
| U | Bearing flush port, ISO 6149, M22x1.5, 15.5 mm deep | | |
| Y1 | Measuring port, ISO 6149, M14x1.5, 11.5 mm deep | | |
| | | | |

# Technical Specification | Mounting Flanges Auxiliary Ports | Plug-in, similar to ISO 3019-2 | **S2/CMV170**


OVERVIEW
- Key Facts

CONFIGURATION
- Modelcode & Availability

TECHNICAL SPECIFICATION
- General Technical Data
- Operating Parameters
- Controls
- Sensors
- Electric Interfaces
  - Connectors
- Mechanical Interfaces
  - Flanges
  - Shafts
- Hydraulical Interfaces
  - Work Ports
  - Auxiliary Ports
- Functions/Options

ISO 3019-1/ SAE J744
- C4 / CMV 60
- C2 / CMV 85
- D4 / CMV 115
- D4 / CMV 140
- D4 / CMV 170
- E4 / CMV 215

ISO 3019-2 metric
- M4 / CMV 60
- N4 / CMV 85
- P4 / CMV 115
- R4 / CMV 140
- R4 / CMV 170
- S4 / CMV 215

Plug-in, similar to ISO 3019-2
- P2 / CMV 60
- Y2 / CMV 85
- S2 / CMV 115
- S2 / CMV 140
- S2 / CMV 170
- Z4 / CMV 215


In the following you will find the technical specifications of the mounting flanges and auxiliary ports. They are clustered according to the standard and nominal sizes. First get an overview of the dimensions. Note the short designations such as „C4“ or „E4“. In the section [Model Code & Availability] you can then check the availability of the mounting flange as well as auxiliary ports and compile your desired configuration using the short designations as a segment of the model code.

## Dimensions - Side view

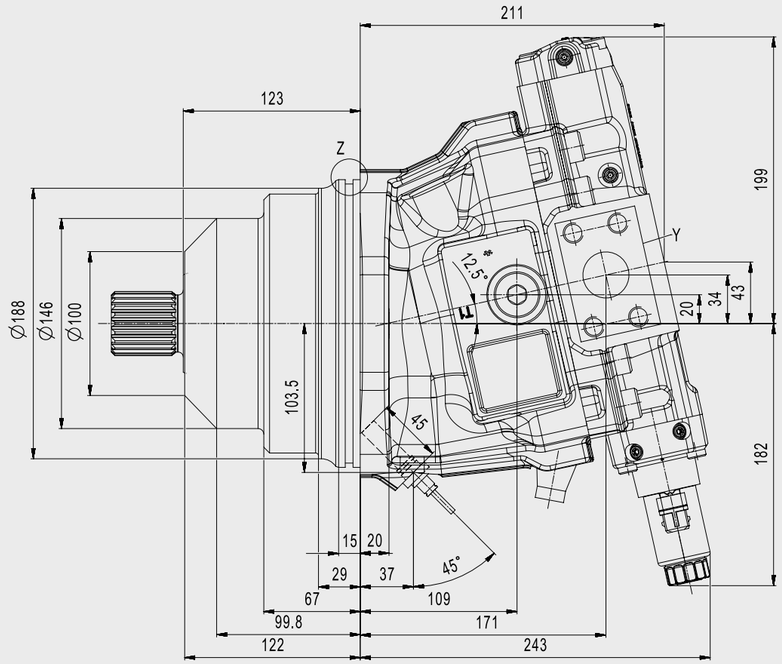


## Dimensions - Front view

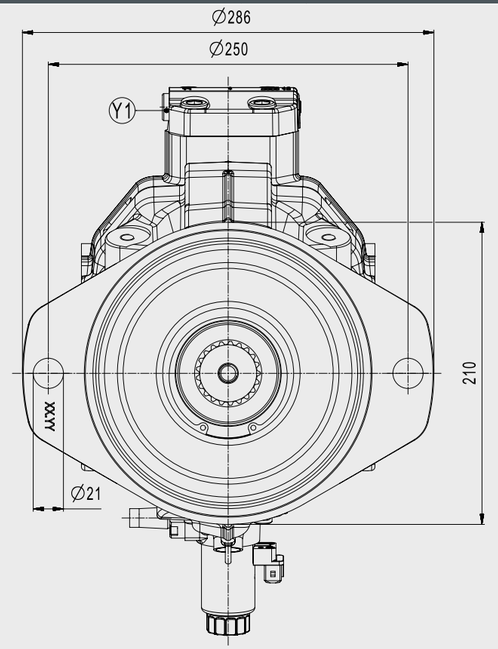


| | | | |
|---|---|---|---|
| A | High pressure work port, ISO 6162-2, SAE 1 1/4“<br>If pressurised - motor runs clockwise<br>Nom. pres.: 450 bar, max. press.: 500 bar | AX<br>BX | Pressure equalization port, ISO 6149, M14x1.5, 11.5 mm deep |
| B | High pressure work port, ISO 6162-2, SAE 1 1/4“<br>If pressurised - motor runs counter-clockwise<br>Nom. pres.: 450 bar, max. press.: 500 bar | T1 | Drain / vent port, ISO 6149, M27x2, 19 mm deep |
| | | T2 | Drain / vent port, ISO 6149, M33x2, 19 mm deep |

| | | | |
|---|---|---|---|
| G | Ext. control pressure supply, ISO 6149, M14x1.5, 11.5 mm deep | | |
| U | Bearing flush port, ISO 6149, M22x1.5, 15.5 mm deep | | |
| Y1 | Measuring port, ISO 6149, M14x1.5, 11.5 mm deep | | |
| | | | |

# Technical Specification | Mounting Flanges Auxiliary Ports | Plug-in, similar to ISO 3019-2 | **Z4/CMV215**


OVERVIEW
- Key Facts

CONFIGURATION
- Modelcode & Availability

TECHNICAL SPECIFICATION
- General Technical Data
- Operating Parameters
- Controls
- Sensors
- Electric Interfaces
  - Connectors
- Mechanical Interfaces
  - Flanges
  - Shafts
- Hydraulical Interfaces
  - Work Ports
  - Auxiliary Ports
- Functions/Options

ISO 3019-1/ SAE J744
- C4 / CMV 60
- C2 / CMV 85
- D4 / CMV 115
- D4 / CMV 140
- D4 / CMV 170
- E4 / CMV 215

ISO 3019-2 metric
- M4 / CMV 60
- N4 / CMV 85
- P4 / CMV 115
- R4 / CMV 140
- R4 / CMV 170
- S4 / CMV 215

Plug-in, similar to ISO 3019-2
- P2 / CMV 60
- Y2 / CMV 85
- S2 / CMV 115
- S2 / CMV 140
- S2 / CMV 170
- Z4 / CMV 215


In the following you will find the technical specifications of the mounting flanges and auxiliary ports. They are clustered according to the standard and nominal sizes. First get an overview of the dimensions. Note the short designations such as „C4“ or „E4“. In the section [Model Code & Availability] you can then check the availability of the mounting flange as well as auxiliary ports and compile your desired configuration using the short designations as a segment of the model code.

## Dimensions - Top view

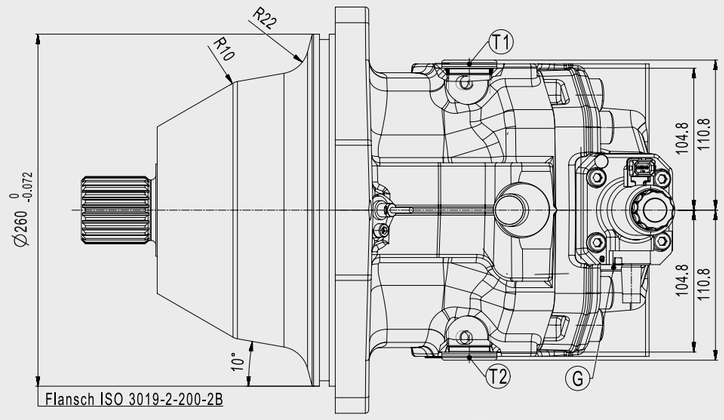


| | | | | | | | |
|---|---|---|---|---|---|---|---|
| A | High pressure work port, ISO 6162-2, SAE 1 1/4“<br>If pressurised - motor runs clockwise<br>Nom. pres.: 450 bar, max. press.: 500 bar | AX<br>BX | Pressure equalization port, ISO 6149, M22x1.5, 15.5 mm deep | G | Ext. control pressure supply, ISO 6149, M14x1.5, 11.5 mm deep | | |
| B | High pressure work port, ISO 6162-2, SAE 1 1/4“<br>If pressurised - motor runs counter-clockwise<br>Nom. pres.: 450 bar, max. press.: 500 bar | T1 | Drain / vent port, ISO 6149, M33x2, 19 mm deep | U | Bearing flush port, ISO 6149, M22x1.5, 15.5 mm deep | | |
| | | T2 | Drain / vent port, ISO 6149, M42x2, 19.5 mm deep | Y1 | Measuring port, ISO 6149, M14x1.5, 11.5 mm deep | | |

# Technical Specification | Mounting Flanges Auxiliary Ports | Plug-in, similar to ISO 3019-2 | **Z4/CMV215**


OVERVIEW
- Key Facts

CONFIGURATION
- Modelcode & Availability

TECHNICAL SPECIFICATION
- General Technical Data
- Operating Parameters
- Controls
- Sensors
- Electric Interfaces
  - Connectors
- Mechanical Interfaces
  - Flanges
  - Shafts
- Hydraulical Interfaces
  - Work Ports
  - Auxiliary Ports
- Functions/Options

ISO 3019-1/ SAE J744
- C4 / CMV 60
- C2 / CMV 85
- D4 / CMV 115
- D4 / CMV 140
- D4 / CMV 170
- E4 / CMV 215

ISO 3019-2 metric
- M4 / CMV 60
- N4 / CMV 85
- P4 / CMV 115
- R4 / CMV 140
- R4 / CMV 170
- S4 / CMV 215

Plug-in, similar to ISO 3019-2
- P2 / CMV 60
- Y2 / CMV 85
- S2 / CMV 115
- S2 / CMV 140
- S2 / CMV 170
- Z4 / CMV 215


In the following you will find the technical specifications of the mounting flanges and auxiliary ports. They are clustered according to the standard and nominal sizes. First get an overview of the dimensions. Note the short designations such as „C4“ or „E4“. In the section [Model Code & Availability] you can then check the availability of the mounting flange as well as auxiliary ports and compile your desired configuration using the short designations as a segment of the model code.

## Dimensions - Side view

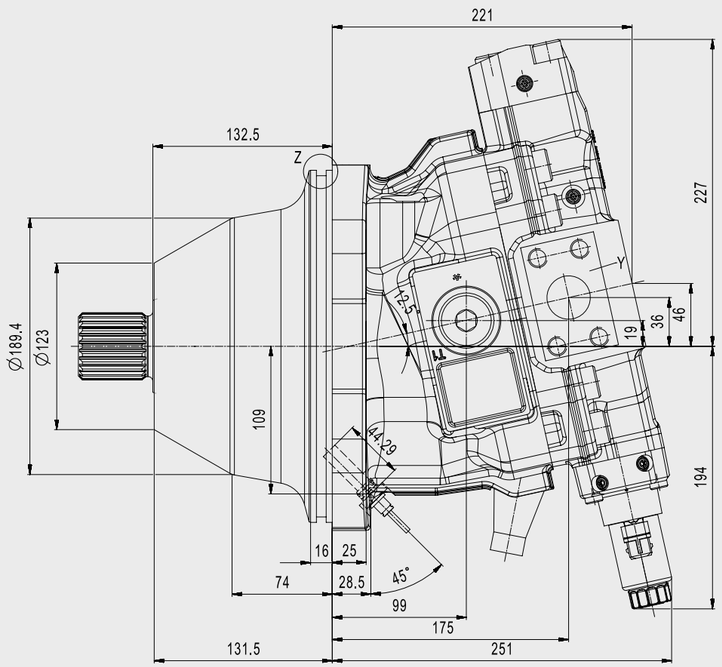


## Dimensions - Front view

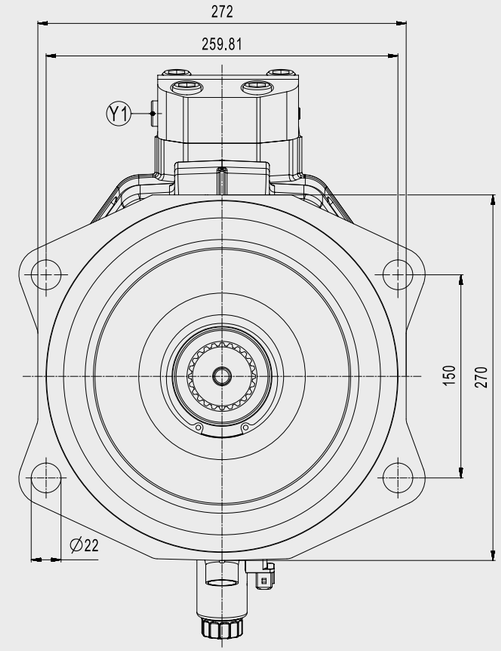


| | | | |
|---|---|---|---|
| A | High pressure work port, ISO 6162-2, SAE 1 1/4“<br>If pressurised - motor runs clockwise<br>Nom. pres.: 450 bar, max. press.: 500 bar | AX<br>BX | Pressure equalization port, ISO 6149, M22x1.5, 15.5 mm deep |
| B | High pressure work port, ISO 6162-2, SAE 1 1/4“<br>If pressurised - motor runs counter-clockwise<br>Nom. pres.: 450 bar, max. press.: 500 bar | T1 | Drain / vent port, ISO 6149, M33x2, 19 mm deep |
| | | T2 | Drain / vent port, ISO 6149, M42x2, 19.5 mm deep |

| | | | |
|---|---|---|---|
| G | Ext. control pressure supply, ISO 6149, M14x1.5, 11.5 mm deep | | |
| U | Bearing flush port, ISO 6149, M22x1.5, 15.5 mm deep | | |
| Y1 | Measuring port, ISO 6149, M14x1.5, 11.5 mm deep | | |
| | | | |

OVERVIEW
Key Facts
CONFIGURATION
Modelcode & Availability
TECHNICAL SPECIFICATION
General Technical Data
Operating Parameters
Controls
Sensors
Electric Interfaces
Connectors
Mechanical Interfaces
Flanges
Shafts
Hydraulical Interfaces
Work Ports
Auxiliary Ports
Functions/Options
ISO 3019-1/ SAE J744
S7 / CMV 60
S8 / CMV 85
S9 / CMV 85
V6 / CMV 85/115
V7 / CMV 140/170
T1 / CMV 115/140/170
T2 / CMV 170/215
DIN5480
D3 / CMV 60
D4 / CMV 60/85
D5 / CMV 85/115
D6 / CMV 115/140/170
D7 / CMV 170/215
SAE J1946
F4

# Technical Specification | Drive Shafts / Comp. Flanges | ISO 3019-1/SAE J744 | **S7 / CMV 60**

In the following you will find the technical specifications of the drive shafts. They are clustered according to the related mounting flange and nominal size. First get an overview of the table data showing standard and load capacity of the shafts. Beyond that you will find the dimensions of each shaft in combination with each relevant mounting flange and nominal size. Note the short designations such as „S7“ or „D3“. In the section [Model Code & Availability], you can then check the availability of the flange and auxiliary ports and compile your desired configuration using the short designations as a segment of the model code.

| Specification | | | | | | |
|---|---|---|---|---|---|---|
| Shaft end related data | Specification | Standard | | | | ISO 3019-1/SAE J744 |
| | | Number of teeth | | | | 14 |
| | | Spline pitch/module | | | | 12/24 |
| | | Identification code | | | | 32-4 |
| Nominal size related data | **Nominal size** | | | | | **60** |
| | Torque | Maximum torque | | | Nm | 400 |
| | Pressure | Maximum differential pressure | | dpmax | bar | 405 |
| | Radial forces | 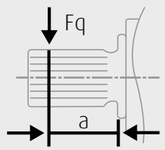  | | $F_{pmax}$ | N | 6930 |
| | | | | a | mm | 24 |
| | Axial forces | 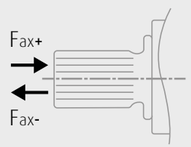  | Motor at standstill or in rotation considering unpressurized work ports | Fax+ | N | 0 |
| | | | | Fax- | N | 500 |
| | | | Work ports pressurized | Fax+/p | N/bar | 7.5 |

# Technical Specification | Drive Shafts / Comp. Flanges | ISO 3019-1/SAE J744 | **S7 / CMV 60**

In the following you will find the technical specifications of the drive shafts. They are clustered according to the related mounting flange and nominal size. First get an overview of the table data showing standard and load capacity of the shafts. Beyond that you will find the dimensions of each shaft in combination with each relevant mounting flange and nominal size. Note the short designations such as „S7“ or „D3“. In the section [Model Code & Availability], you can then check the availability of the flange and auxiliary ports and compile your desired configuration using the short designations as a segment of the model code.

## Dimensions

**E4|XX** **ISO SAE**

Dimensions
upon request

## Dimensions

**CMV60** **ISO METR**

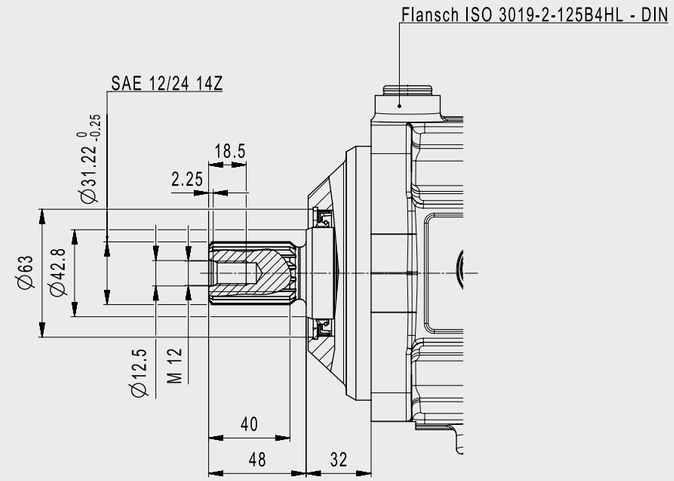


| | | | |
|---|---|---|---|
| CMV60 | Nominal size 60 | CMV170 | Nominal size 170 |
| CMV85 | Nominal size 85 | CMV215 | Nominal size 215 |
| CMV115 | Nominal size 115 | ISO SAE | Mounting flange ISO 3019-1/ SAE J744 |
| CMV140 | Nominal size 140 | ISO METR | Mounting flange ISO 3019-2 metric |

| | |
|---|---|
| PLUG-IN | Mounting flange Plug-in, similar to ISO 3019-2 |

# Technical Specification | Drive Shafts / Comp. Flanges | ISO 3019-1/SAE J744 | **S7 / CMV 60**


OVERVIEW
- Key Facts

CONFIGURATION
- Modelcode & Availability

TECHNICAL SPECIFICATION
- General Technical Data
- Operating Parameters
- Controls
- Sensors
- Electric Interfaces
  - Connectors
- Mechanical Interfaces
  - Flanges
  - Shafts
- Hydraulical Interfaces
  - Work Ports
  - Auxiliary Ports
- Functions/Options

ISO 3019-1/ SAE J744
- S7 / CMV 60
- S8 / CMV 85
- S9 / CMV 85
- V6 / CMV 85/115
- V7 / CMV 140/170
- T1 / CMV 115/140/170
- T2 / CMV 170/215

DIN5480
- D3 / CMV 60
- D4 / CMV 60/85
- D5 / CMV 85/115
- D6 / CMV 115/140/170
- D7 / CMV 170/215

SAE J1946
- F4


In the following you will find the technical specifications of the drive shafts. They are clustered according to the related mounting flange and nominal size. First get an overview of the table data showing standard and load capacity of the shafts. Beyond that you will find the dimensions of each shaft in combination with each relevant mounting flange and nominal size. Note the short designations such as „S7“ or „D3“. In the section [Model Code & Availability], you can then check the availability of the flange and auxiliary ports and compile your desired configuration using the short designations as a segment of the model code.

## Dimensions

**E4|XX** **PLUG-IN**

Dimensions
upon request

## Dimensions

| | | | |
|---|---|---|---|
| CMV60 | Nominal size 60 | CMV170 | Nominal size 170 |
| CMV85 | Nominal size 85 | CMV215 | Nominal size 215 |
| CMV115 | Nominal size 115 | ISO SAE | Mounting flange ISO 3019-1/ SAE J744 |
| CMV140 | Nominal size 140 | ISO METR | Mounting flange ISO 3019-2 metric |

| | | | |
|---|---|---|---|
| PLUG-IN | Mounting flange Plug-in, similar to ISO 3019-2 | | |
| | | | |
| | | | |
| | | | |

OVERVIEW
Key Facts
CONFIGURATION
Modelcode & Availability
TECHNICAL SPECIFICATION
General Technical Data
Operating Parameters
Controls
Sensors
Electric Interfaces
Connectors
Mechanical Interfaces
Flanges
Shafts
Hydraulical Interfaces
Work Ports
Auxiliary Ports
Functions/Options
ISO 3019-1/ SAE J744
S7 / CMV 60
S8 / CMV 85
S9 / CMV 85
V6 / CMV 85/115
V7 / CMV 140/170
T1 / CMV 115/140/170
T2 / CMV 170/215
DIN5480
D3 / CMV 60
D4 / CMV 60/85
D5 / CMV 85/115
D6 / CMV 115/140/170
D7 / CMV 170/215
SAE J1946
F4

# Technical Specification | Drive Shafts / Comp. Flanges | ISO 3019-1/SAE J744 | **S8 / CMV 85**

In the following you will find the technical specifications of the drive shafts. They are clustered according to the related mounting flange and nominal size. First get an overview of the table data showing standard and load capacity of the shafts. Beyond that you will find the dimensions of each shaft in combination with each relevant mounting flange and nominal size. Note the short designations such as „S7“ or „D3“. In the section [Model Code & Availability], you can then check the availability of the flange and auxiliary ports and compile your desired configuration using the short designations as a segment of the model code.

| Specification | | | | | | |
|---|---|---|---|---|---|---|
| Shaft end related data | Specification | Standard | | | | ISO 3019-1/SAE J744 |
| | | Number of teeth | | | | 21 |
| | | Spline pitch/module | | | | 16/32 |
| | | Identification code | | | | 35-4 |
| Nominal size related data | **Nominal size** | | | | | **85** |
| | Torque | Maximum torque | | | Nm | 628 |
| | Pressure | Maximum differential pressure | | dpmax | bar | 450 |
| | Radial forces | 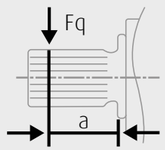  | | $F_{pmax}$ | N | 12500 |
| | | | a | a | mm | 24 |
| | Axial forces | 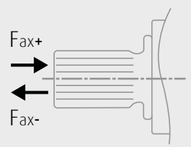  | Motor at standstill or in rotation considering unpressurized work ports | Fax+ | N | 0 |
| | | | | Fax- | N | 710 |
| | | | Work ports pressurized | Fax+/p | N/bar | 9.6 |

# Technical Specification | Drive Shafts / Comp. Flanges | ISO 3019-1/SAE J744 | **S8 / CMV 85**


OVERVIEW
- Key Facts

CONFIGURATION
- Modelcode & Availability

TECHNICAL SPECIFICATION
- General Technical Data
- Operating Parameters
- Controls
- Sensors
- Electric Interfaces
  - Connectors
- Mechanical Interfaces
  - Flanges
  - Shafts
- Hydraulical Interfaces
  - Work Ports
  - Auxiliary Ports
- Functions/Options

ISO 3019-1/ SAE J744
- S7 / CMV 60
- S8 / CMV 85
- S9 / CMV 85
- V6 / CMV 85/115
- V7 / CMV 140/170
- T1 / CMV 115/140/170
- T2 / CMV 170/215

DIN5480
- D3 / CMV 60
- D4 / CMV 60/85
- D5 / CMV 85/115
- D6 / CMV 115/140/170
- D7 / CMV 170/215

SAE J1946
- F4


In the following you will find the technical specifications of the drive shafts. They are clustered according to the related mounting flange and nominal size. First get an overview of the table data showing standard and load capacity of the shafts. Beyond that you will find the dimensions of each shaft in combination with each relevant mounting flange and nominal size. Note the short designations such as „S7“ or „D3“. In the section [Model Code & Availability], you can then check the availability of the flange and auxiliary ports and compile your desired configuration using the short designations as a segment of the model code.

## Dimensions

**E4|XX** **ISO SAE**

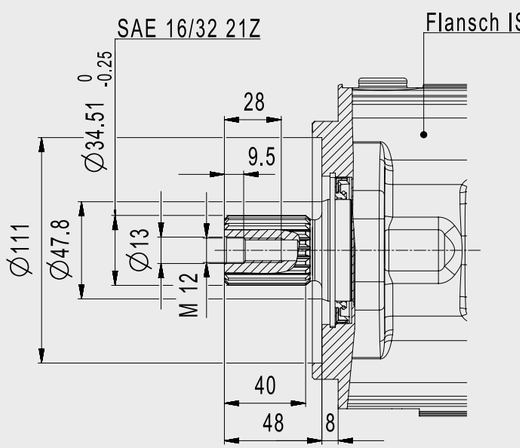


## Dimensions

**CMV60** **ISO METR**

Dimensions
upon request

| | | | |
|---|---|---|---|
| CMV60 | Nominal size 60 | CMV170 | Nominal size 170 |
| CMV85 | Nominal size 85 | CMV215 | Nominal size 215 |
| CMV115 | Nominal size 115 | ISO SAE | Mounting flange ISO 3019-1/ SAE J744 |
| CMV140 | Nominal size 140 | ISO METR | Mounting flange ISO 3019-2 metric |

| | | | |
|---|---|---|---|
| PLUG-IN | Mounting flange Plug-in, similar to ISO 3019-2 | | |
| | | | |
| | | | |
| | | | |

# Technical Specification | Drive Shafts / Comp. Flanges | ISO 3019-1/SAE J744 | **S8 / CMV 85**


OVERVIEW
- Key Facts

CONFIGURATION
- Modelcode & Availability

TECHNICAL SPECIFICATION
- General Technical Data
- Operating Parameters
- Controls
- Sensors
- Electric Interfaces
  - Connectors
- Mechanical Interfaces
  - Flanges
  - Shafts
- Hydraulical Interfaces
  - Work Ports
  - Auxiliary Ports
- Functions/Options

ISO 3019-1/ SAE J744
- S7 / CMV 60
- S8 / CMV 85
- S9 / CMV 85
- V6 / CMV 85/115
- V7 / CMV 140/170
- T1 / CMV 115/140/170
- T2 / CMV 170/215

DIN5480
- D3 / CMV 60
- D4 / CMV 60/85
- D5 / CMV 85/115
- D6 / CMV 115/140/170
- D7 / CMV 170/215

SAE J1946
- F4


In the following you will find the technical specifications of the drive shafts. They are clustered according to the related mounting flange and nominal size. First get an overview of the table data showing standard and load capacity of the shafts. Beyond that you will find the dimensions of each shaft in combination with each relevant mounting flange and nominal size. Note the short designations such as „S7“ or „D3“. In the section [Model Code & Availability], you can then check the availability of the flange and auxiliary ports and compile your desired configuration using the short designations as a segment of the model code.

## Dimensions

**E4|XX** **PLUG-IN**

Dimensions
upon request

## Dimensions

| | | | |
|---|---|---|---|
| CMV60 | Nominal size 60 | CMV170 | Nominal size 170 |
| CMV85 | Nominal size 85 | CMV215 | Nominal size 215 |
| CMV115 | Nominal size 115 | ISO SAE | Mounting flange ISO 3019-1/ SAE J744 |
| CMV140 | Nominal size 140 | ISO METR | Mounting flange ISO 3019-2 metric |

| | | | |
|---|---|---|---|
| PLUG-IN | Mounting flange Plug-in, similar to ISO 3019-2 | | |
| | | | |
| | | | |
| | | | |

OVERVIEW
Key Facts
CONFIGURATION
Modelcode & Availability
TECHNICAL SPECIFICATION
General Technical Data
Operating Parameters
Controls
Sensors
Electric Interfaces
Connectors
Mechanical Interfaces
Flanges
Shafts
Hydraulical Interfaces
Work Ports
Auxiliary Ports
Functions/Options
ISO 3019-1/ SAE J744
S7 / CMV 60
S8 / CMV 85
S9 / CMV 85
V6 / CMV 85/115
V7 / CMV 140/170
T1 / CMV 115/140/170
T2 / CMV 170/215
DIN5480
D3 / CMV 60
D4 / CMV 60/85
D5 / CMV 85/115
D6 / CMV 115/140/170
D7 / CMV 170/215
SAE J1946
F4

# Technical Specification | Drive Shafts / Comp. Flanges | ISO 3019-1/SAE J744 | **S9 / CMV 85**

In the following you will find the technical specifications of the drive shafts. They are clustered according to the related mounting flange and nominal size. First get an overview of the table data showing standard and load capacity of the shafts. Beyond that you will find the dimensions of each shaft in combination with each relevant mounting flange and nominal size. Note the short designations such as „S7“ or „D3“. In the section [Model Code & Availability], you can then check the availability of the flange and auxiliary ports and compile your desired configuration using the short designations as a segment of the model code.

| Specification | | | | | | |
|---|---|---|---|---|---|---|
| Shaft end related data | Specification | Standard | | | | ISO 3019-1/SAE J744 |
| | | Number of teeth | | | | 17 |
| | | Spline pitch/module | | | | 12/24 |
| | | Identification code | | | | 38-4 |
| Nominal size related data | **Nominal size** | | | | | **85** |
| | Torque | Maximum torque | | | Nm | 600 |
| | Pressure | Maximum differential pressure | | dpmax | bar | 430 |
| | Radial forces | 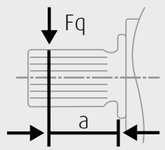  | | $F_{pmax}$ | N | 12500 |
| | | | a | a | mm | 27 |
| | Axial forces | 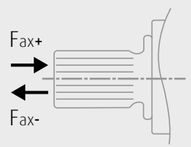  | Motor at standstill or in rotation considering unpressurized work ports | Fax+ | N | 0 |
| | | | | Fax- | N | 710 |
| | | | Work ports pressurized | Fax+/p | N/bar | 9.6 |

# Technical Specification | Drive Shafts / Comp. Flanges | ISO 3019-1/SAE J744 | **S9 / CMV 85**


OVERVIEW
- Key Facts

CONFIGURATION
- Modelcode & Availability

TECHNICAL SPECIFICATION
- General Technical Data
- Operating Parameters
- Controls
- Sensors
- Electric Interfaces
  - Connectors
- Mechanical Interfaces
  - Flanges
  - Shafts
- Hydraulical Interfaces
  - Work Ports
  - Auxiliary Ports
- Functions/Options

ISO 3019-1/ SAE J744
- S7 / CMV 60
- S8 / CMV 85
- S9 / CMV 85
- V6 / CMV 85/115
- V7 / CMV 140/170
- T1 / CMV 115/140/170
- T2 / CMV 170/215

DIN5480
- D3 / CMV 60
- D4 / CMV 60/85
- D5 / CMV 85/115
- D6 / CMV 115/140/170
- D7 / CMV 170/215

SAE J1946
- F4


In the following you will find the technical specifications of the drive shafts. They are clustered according to the related mounting flange and nominal size. First get an overview of the table data showing standard and load capacity of the shafts. Beyond that you will find the dimensions of each shaft in combination with each relevant mounting flange and nominal size. Note the short designations such as „S7“ or „D3“. In the section [Model Code & Availability], you can then check the availability of the flange and auxiliary ports and compile your desired configuration using the short designations as a segment of the model code.

## Dimensions

**E4|XX** **ISO SAE**

Dimensions
upon request

## Dimensions

**CMV60** **ISO METR**

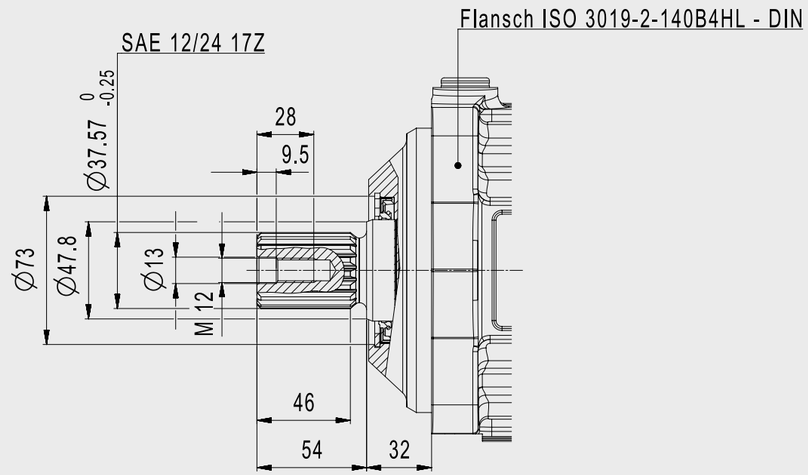


| | | | |
|---|---|---|---|
| CMV60 | Nominal size 60 | CMV170 | Nominal size 170 |
| CMV85 | Nominal size 85 | CMV215 | Nominal size 215 |
| CMV115 | Nominal size 115 | ISO SAE | Mounting flange ISO 3019-1/ SAE J744 |
| CMV140 | Nominal size 140 | ISO METR | Mounting flange ISO 3019-2 metric |

| | |
|---|---|
| PLUG-IN | Mounting flange Plug-in, similar to ISO 3019-2 |

# Technical Specification | Drive Shafts / Comp. Flanges | ISO 3019-1/SAE J744 | **S9 / CMV 85**


OVERVIEW
- Key Facts

CONFIGURATION
- Modelcode & Availability

TECHNICAL SPECIFICATION
- General Technical Data
- Operating Parameters
- Controls
- Sensors
- Electric Interfaces
  - Connectors
- Mechanical Interfaces
  - Flanges
  - Shafts
- Hydraulical Interfaces
  - Work Ports
  - Auxiliary Ports
- Functions/Options

ISO 3019-1/ SAE J744
- S7 / CMV 60
- S8 / CMV 85
- S9 / CMV 85
- V6 / CMV 85/115
- V7 / CMV 140/170
- T1 / CMV 115/140/170
- T2 / CMV 170/215

DIN5480
- D3 / CMV 60
- D4 / CMV 60/85
- D5 / CMV 85/115
- D6 / CMV 115/140/170
- D7 / CMV 170/215

SAE J1946
- F4


In the following you will find the technical specifications of the drive shafts. They are clustered according to the related mounting flange and nominal size. First get an overview of the table data showing standard and load capacity of the shafts. Beyond that you will find the dimensions of each shaft in combination with each relevant mounting flange and nominal size. Note the short designations such as „S7“ or „D3“. In the section [Model Code & Availability], you can then check the availability of the flange and auxiliary ports and compile your desired configuration using the short designations as a segment of the model code.

## Dimensions

**E4|XX** **PLUG-IN**

Dimensions
upon request

## Dimensions

| | | | |
|---|---|---|---|
| CMV60 | Nominal size 60 | CMV170 | Nominal size 170 |
| CMV85 | Nominal size 85 | CMV215 | Nominal size 215 |
| CMV115 | Nominal size 115 | ISO SAE | Mounting flange ISO 3019-1/ SAE J744 |
| CMV140 | Nominal size 140 | ISO METR | Mounting flange ISO 3019-2 metric |

| | | | |
|---|---|---|---|
| PLUG-IN | Mounting flange Plug-in, similar to ISO 3019-2 | | |
| | | | |
| | | | |
| | | | |

OVERVIEW
Key Facts
CONFIGURATION
Modelcode & Availability
TECHNICAL SPECIFICATION
General Technical Data
Operating Parameters
Controls
Sensors
Electric Interfaces
Connectors
Mechanical Interfaces
Flanges
Shafts
Hydraulical Interfaces
Work Ports
Auxiliary Ports
Functions/Options
ISO 3019-1/ SAE J744
S7 / CMV 60
S8 / CMV 85
S9 / CMV 85
V6 / CMV 85/115
V7 / CMV 140/170
T1 / CMV 115/140/170
T2 / CMV 170/215
DIN5480
D3 / CMV 60
D4 / CMV 60/85
D5 / CMV 85/115
D6 / CMV 115/140/170
D7 / CMV 170/215
SAE J1946
F4

# Technical Specification | Drive Shafts / Comp. Flanges | ISO 3019-1/SAE J744 | **V6 / CMV 85/115**

In the following you will find the technical specifications of the drive shafts. They are clustered according to the related mounting flange and nominal size. First get an overview of the table data showing standard and load capacity of the shafts. Beyond that you will find the dimensions of each shaft in combination with each relevant mounting flange and nominal size. Note the short designations such as „S7“ or „D3“. In the section [Model Code & Availability], you can then check the availability of the flange and auxiliary ports and compile your desired configuration using the short designations as a segment of the model code.

| Specification | | | | | | | |
|---|---|---|---|---|---|---|---|
| Shaft end related data | Specification | Standard | | | | ISO 3019-1/SAE J744 | |
| | | Number of teeth | | | | 23 | |
| | | Spline pitch/module | | | | 16/32 | |
| | | Identification code | | | | 38-4 | |
| Nominal size related data | **Nominal size** | | | | | **85** | **115** |
| | Torque | Maximum torque | | | Nm | 628 | 578 |
| | Pressure | Maximum differential pressure | | dpmax | bar | 450 | 315 |
| | Radial forces | 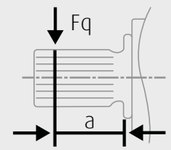  | | $F_{pmax}$ | N | 12500 | 9450 |
| | | | | a | mm | 27 | 27 |
| | Axial forces | 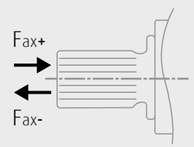  | Motor at standstill or in rotation considering unpressurized work ports | Fax+ | N | 0 | 0 |
| | | | | Fax- | N | 710 | 1000 |
| | | | Work ports pressurized | Fax+/p | N/bar | 9.6 | 11 |

# Technical Specification | Drive Shafts / Comp. Flanges | ISO 3019-1/SAE J744 | **V6 / CMV 85/115**


OVERVIEW
- Key Facts

CONFIGURATION
- Modelcode & Availability

TECHNICAL SPECIFICATION
- General Technical Data
- Operating Parameters
- Controls
- Sensors
- Electric Interfaces
  - Connectors
- Mechanical Interfaces
  - Flanges
  - Shafts
- Hydraulical Interfaces
  - Work Ports
  - Auxiliary Ports
- Functions/Options

ISO 3019-1/ SAE J744
- S7 / CMV 60
- S8 / CMV 85
- S9 / CMV 85
- V6 / CMV 85/115
- V7 / CMV 140/170
- T1 / CMV 115/140/170
- T2 / CMV 170/215

DIN5480
- D3 / CMV 60
- D4 / CMV 60/85
- D5 / CMV 85/115
- D6 / CMV 115/140/170
- D7 / CMV 170/215

SAE J1946
- F4


In the following you will find the technical specifications of the drive shafts. They are clustered according to the related mounting flange and nominal size. First get an overview of the table data showing standard and load capacity of the shafts. Beyond that you will find the dimensions of each shaft in combination with each relevant mounting flange and nominal size. Note the short designations such as „S7“ or „D3“. In the section [Model Code & Availability], you can then check the availability of the flange and auxiliary ports and compile your desired configuration using the short designations as a segment of the model code.

## Dimensions

E4|XX ISO SAE

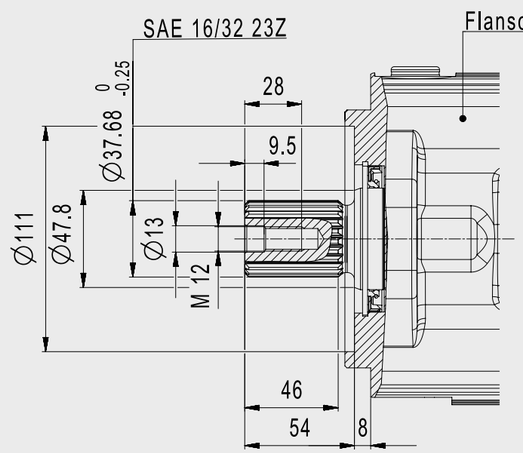


## Dimensions

CMV60 ISO METR

Dimensions upon request

| | | | |
|---|---|---|---|
| CMV60 | Nominal size 60 | CMV170 | Nominal size 170 |
| CMV85 | Nominal size 85 | CMV215 | Nominal size 215 |
| CMV115 | Nominal size 115 | ISO SAE | Mounting flange ISO 3019-1/ SAE J744 |
| CMV140 | Nominal size 140 | ISO METR | Mounting flange ISO 3019-2 metric |

| | | | |
|---|---|---|---|
| PLUG-IN | Mounting flange Plug-in, similar to ISO 3019-2 | | |
| | | | |
| | | | |
| | | | |

# Technical Specification | Drive Shafts / Comp. Flanges | ISO 3019-1/SAE J744 | **V6 / CMV 85/115**


OVERVIEW
- Key Facts

CONFIGURATION
- Modelcode & Availability

TECHNICAL SPECIFICATION
- General Technical Data
- Operating Parameters
- Controls
- Sensors
- Electric Interfaces
  - Connectors
- Mechanical Interfaces
  - Flanges
  - Shafts
- Hydraulical Interfaces
  - Work Ports
  - Auxiliary Ports
- Functions/Options

ISO 3019-1/ SAE J744
- S7 / CMV 60
- S8 / CMV 85
- S9 / CMV 85
- V6 / CMV 85/115
- V7 / CMV 140/170
- T1 / CMV 115/140/170
- T2 / CMV 170/215

DIN5480
- D3 / CMV 60
- D4 / CMV 60/85
- D5 / CMV 85/115
- D6 / CMV 115/140/170
- D7 / CMV 170/215

SAE J1946
- F4


In the following you will find the technical specifications of the drive shafts. They are clustered according to the related mounting flange and nominal size. First get an overview of the table data showing standard and load capacity of the shafts. Beyond that you will find the dimensions of each shaft in combination with each relevant mounting flange and nominal size. Note the short designations such as „S7“ or „D3“. In the section [Model Code & Availability], you can then check the availability of the flange and auxiliary ports and compile your desired configuration using the short designations as a segment of the model code.

## Dimensions

**E4|XX** **PLUG-IN**

Dimensions
upon request

## Dimensions

| | | | |
|---|---|---|---|
| CMV60 | Nominal size 60 | CMV170 | Nominal size 170 |
| CMV85 | Nominal size 85 | CMV215 | Nominal size 215 |
| CMV115 | Nominal size 115 | ISO SAE | Mounting flange ISO 3019-1/ SAE J744 |
| CMV140 | Nominal size 140 | ISO METR | Mounting flange ISO 3019-2 metric |

| | | | |
|---|---|---|---|
| PLUG-IN | Mounting flange Plug-in, similar to ISO 3019-2 | | |
| | | | |
| | | | |
| | | | |

# Technical Specification | Drive Shafts / Comp. Flanges | ISO 3019-1/SAE J744 | **V6 / CMV 85/115**


OVERVIEW
- Key Facts

CONFIGURATION
- Modelcode & Availability

TECHNICAL SPECIFICATION
- General Technical Data
- Operating Parameters
- Controls
- Sensors
- Electric Interfaces
  - Connectors
- Mechanical Interfaces
  - Flanges
  - Shafts
- Hydraulical Interfaces
  - Work Ports
  - Auxiliary Ports
- Functions/Options

ISO 3019-1/ SAE J744
- S7 / CMV 60
- S8 / CMV 85
- S9 / CMV 85
- V6 / CMV 85/115
- V7 / CMV 140/170
- T1 / CMV 115/140/170
- T2 / CMV 170/215

DIN5480
- D3 / CMV 60
- D4 / CMV 60/85
- D5 / CMV 85/115
- D6 / CMV 115/140/170
- D7 / CMV 170/215

SAE J1946
- F4


In the following you will find the technical specifications of the drive shafts. They are clustered according to the related mounting flange and nominal size. First get an overview of the table data showing standard and load capacity of the shafts. Beyond that you will find the dimensions of each shaft in combination with each relevant mounting flange and nominal size. Note the short designations such as „S7“ or „D3“. In the section [Model Code & Availability], you can then check the availability of the flange and auxiliary ports and compile your desired configuration using the short designations as a segment of the model code.

## Dimensions

**E4|XX** **ISO SAE**

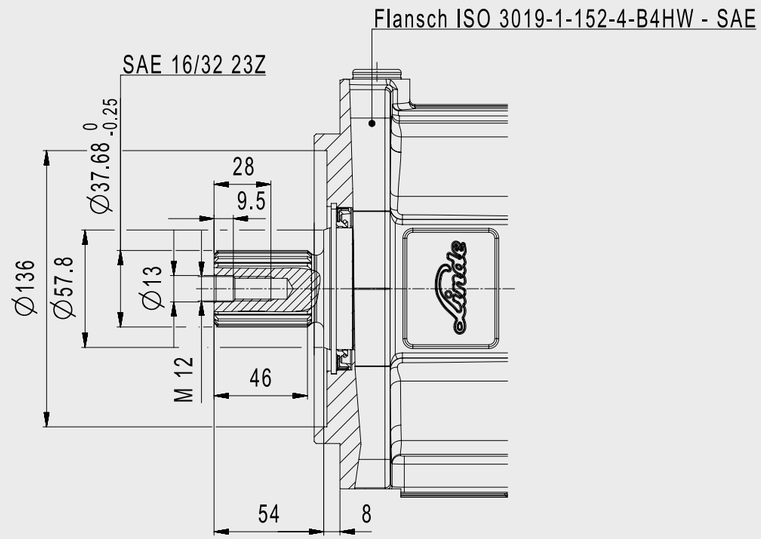


## Dimensions

**CMV60** **ISO METR**

Dimensions
upon request

| | | | |
|---|---|---|---|
| CMV60 | Nominal size 60 | CMV170 | Nominal size 170 |
| CMV85 | Nominal size 85 | CMV215 | Nominal size 215 |
| CMV115 | Nominal size 115 | ISO SAE | Mounting flange ISO 3019-1/ SAE J744 |
| CMV140 | Nominal size 140 | ISO METR | Mounting flange ISO 3019-2 metric |

| | | | |
|---|---|---|---|
| PLUG-IN | Mounting flange Plug-in, similar to ISO 3019-2 | | |
| | | | |
| | | | |
| | | | |

# Technical Specification | Drive Shafts / Comp. Flanges | ISO 3019-1/SAE J744 | **V6 / CMV 85/115**


OVERVIEW
- Key Facts

CONFIGURATION
- Modelcode & Availability

TECHNICAL SPECIFICATION
- General Technical Data
- Operating Parameters
- Controls
- Sensors
- Electric Interfaces
  - Connectors
- Mechanical Interfaces
  - Flanges
  - Shafts
- Hydraulical Interfaces
  - Work Ports
  - Auxiliary Ports
- Functions/Options

ISO 3019-1/ SAE J744
- S7 / CMV 60
- S8 / CMV 85
- S9 / CMV 85
- V6 / CMV 85/115
- V7 / CMV 140/170
- T1 / CMV 115/140/170
- T2 / CMV 170/215

DIN5480
- D3 / CMV 60
- D4 / CMV 60/85
- D5 / CMV 85/115
- D6 / CMV 115/140/170
- D7 / CMV 170/215

SAE J1946
- F4


In the following you will find the technical specifications of the drive shafts. They are clustered according to the related mounting flange and nominal size. First get an overview of the table data showing standard and load capacity of the shafts. Beyond that you will find the dimensions of each shaft in combination with each relevant mounting flange and nominal size. Note the short designations such as „S7“ or „D3“. In the section [Model Code & Availability], you can then check the availability of the flange and auxiliary ports and compile your desired configuration using the short designations as a segment of the model code.

## Dimensions

**E4|XX** **PLUG-IN**

Dimensions
upon request

## Dimensions

| | | | |
|---|---|---|---|
| CMV60 | Nominal size 60 | CMV170 | Nominal size 170 |
| CMV85 | Nominal size 85 | CMV215 | Nominal size 215 |
| CMV115 | Nominal size 115 | ISO SAE | Mounting flange ISO 3019-1/ SAE J744 |
| CMV140 | Nominal size 140 | ISO METR | Mounting flange ISO 3019-2 metric |

| | | | |
|---|---|---|---|
| PLUG-IN | Mounting flange Plug-in, similar to ISO 3019-2 | | |
| | | | |
| | | | |
| | | | |

OVERVIEW
Key Facts
CONFIGURATION
Modelcode & Availability
TECHNICAL SPECIFICATION
General Technical Data
Operating Parameters
Controls
Sensors
Electric Interfaces
Connectors
Mechanical Interfaces
Flanges
Shafts
Hydraulical Interfaces
Work Ports
Auxiliary Ports
Functions/Options
ISO 3019-1/ SAE J744
S7 / CMV 60
S8 / CMV 85
S9 / CMV 85
V6 / CMV 85/115
V7 / CMV 140/170
T1 / CMV 115/140/170
T2 / CMV 170/215
DIN5480
D3 / CMV 60
D4 / CMV 60/85
D5 / CMV 85/115
D6 / CMV 115/140/170
D7 / CMV 170/215
SAE J1946
F4

# Technical Specification | Drive Shafts / Comp. Flanges | ISO 3019-1/SAE J744 | **V7 / CMV 140/170**

In the following you will find the technical specifications of the drive shafts. They are clustered according to the related mounting flange and nominal size. First get an overview of the table data showing standard and load capacity of the shafts. Beyond that you will find the dimensions of each shaft in combination with each relevant mounting flange and nominal size. Note the short designations such as „S7“ or „D3“. In the section [Model Code & Availability], you can then check the availability of the flange and auxiliary ports and compile your desired configuration using the short designations as a segment of the model code.

| Specification | | | | | | | | |
|---|---|---|---|---|---|---|---|---|
| Shaft end related data | Specification | Standard | | | | ISO 3019-1/SAE J744 | | |
| | | Number of teeth | | | | 27 | | |
| | | Spline pitch/module | | | | 16/32 | | |
| | | Identification code | | | | 44-4 | | |
| Nominal size related data | **Nominal size** | | | | | **140** | **170** | |
| | Torque | Maximum torque | | | Nm | 1032 | 1218 | |
| | Pressure | Maximum differential pressure | | dpmax | bar | 450 | 450 | |
| | Radial forces | 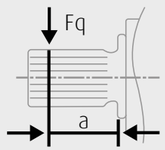 | | $F_{pmax}$ | N | 16000 | 19400 | |
| | | | | a | mm | 33.5 | 33.5 | |
| | Axial forces | 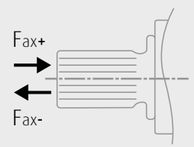 | Motor at standstill or in rotation considering unpressurized work ports | Fax+ | N | 0 | 0 | |
| | | | | Fax- | N | 1210 | 1200 | |
| | | | Work ports pressurized | Fax+/p | N/bar | 12.4 | 15.1 | |

# Technical Specification | Drive Shafts / Comp. Flanges | ISO 3019-1/SAE J744 | **V7 / CMV 140/170**


OVERVIEW
- Key Facts

CONFIGURATION
- Modelcode & Availability

TECHNICAL SPECIFICATION
- General Technical Data
- Operating Parameters
- Controls
- Sensors
- Electric Interfaces
  - Connectors
- Mechanical Interfaces
  - Flanges
  - Shafts
- Hydraulical Interfaces
  - Work Ports
  - Auxiliary Ports
- Functions/Options

ISO 3019-1/ SAE J744
- S7 / CMV 60
- S8 / CMV 85
- S9 / CMV 85
- V6 / CMV 85/115
- V7 / CMV 140/170
- T1 / CMV 115/140/170
- T2 / CMV 170/215

DIN5480
- D3 / CMV 60
- D4 / CMV 60/85
- D5 / CMV 85/115
- D6 / CMV 115/140/170
- D7 / CMV 170/215

SAE J1946
- F4


In the following you will find the technical specifications of the drive shafts. They are clustered according to the related mounting flange and nominal size. First get an overview of the table data showing standard and load capacity of the shafts. Beyond that you will find the dimensions of each shaft in combination with each relevant mounting flange and nominal size. Note the short designations such as „S7“ or „D3“. In the section [Model Code & Availability], you can then check the availability of the flange and auxiliary ports and compile your desired configuration using the short designations as a segment of the model code.

## Dimensions

**E4|XX** **ISO SAE**

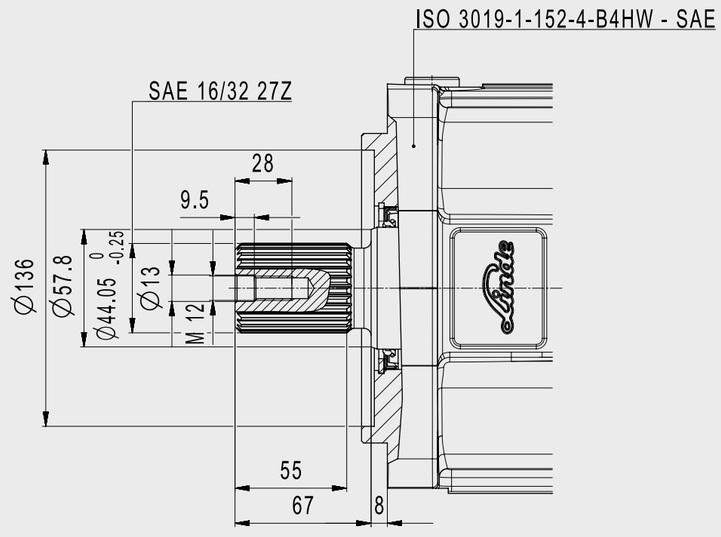


## Dimensions

**CMV60** **ISO METR**

Dimensions
upon request

| | | | |
|---|---|---|---|
| CMV60 | Nominal size 60 | CMV170 | Nominal size 170 |
| CMV85 | Nominal size 85 | CMV215 | Nominal size 215 |
| CMV115 | Nominal size 115 | ISO SAE | Mounting flange ISO 3019-1/ SAE J744 |
| CMV140 | Nominal size 140 | ISO METR | Mounting flange ISO 3019-2 metric |

| | | | |
|---|---|---|---|
| PLUG-IN | Mounting flange Plug-in, similar to ISO 3019-2 | | |
| | | | |
| | | | |
| | | | |

# Technical Specification | Drive Shafts / Comp. Flanges | ISO 3019-1/SAE J744 | **V7 / CMV 140/170**


OVERVIEW
- Key Facts

CONFIGURATION
- Modelcode & Availability

TECHNICAL SPECIFICATION
- General Technical Data
- Operating Parameters
- Controls
- Sensors
- Electric Interfaces
  - Connectors
- Mechanical Interfaces
  - Flanges
  - Shafts
- Hydraulical Interfaces
  - Work Ports
  - Auxiliary Ports
- Functions/Options

ISO 3019-1/ SAE J744
- S7 / CMV 60
- S8 / CMV 85
- S9 / CMV 85
- V6 / CMV 85/115
- V7 / CMV 140/170
- T1 / CMV 115/140/170
- T2 / CMV 170/215

DIN5480
- D3 / CMV 60
- D4 / CMV 60/85
- D5 / CMV 85/115
- D6 / CMV 115/140/170
- D7 / CMV 170/215

SAE J1946
- F4


In the following you will find the technical specifications of the drive shafts. They are clustered according to the related mounting flange and nominal size. First get an overview of the table data showing standard and load capacity of the shafts. Beyond that you will find the dimensions of each shaft in combination with each relevant mounting flange and nominal size. Note the short designations such as „S7“ or „D3“. In the section [Model Code & Availability], you can then check the availability of the flange and auxiliary ports and compile your desired configuration using the short designations as a segment of the model code.

## Dimensions

**E4|XX** **PLUG-IN**

Dimensions upon request

## Dimensions

| | | | |
|---|---|---|---|
| CMV60 | Nominal size 60 | CMV170 | Nominal size 170 |
| CMV85 | Nominal size 85 | CMV215 | Nominal size 215 |
| CMV115 | Nominal size 115 | ISO SAE | Mounting flange ISO 3019-1/ SAE J744 |
| CMV140 | Nominal size 140 | ISO METR | Mounting flange ISO 3019-2 metric |

| | | | |
|---|---|---|---|
| PLUG-IN | Mounting flange Plug-in, similar to ISO 3019-2 | | |
| | | | |
| | | | |
| | | | |

# Technical Specification | Drive Shafts / Comp. Flanges | ISO 3019-1/SAE J744 | **V7 / CMV 140/170**


OVERVIEW
- Key Facts

CONFIGURATION
- Modelcode & Availability

TECHNICAL SPECIFICATION
- General Technical Data
- Operating Parameters
- Controls
- Sensors
- Electric Interfaces
  - Connectors
- Mechanical Interfaces
  - Flanges
  - Shafts
- Hydraulical Interfaces
  - Work Ports
  - Auxiliary Ports
- Functions/Options

ISO 3019-1/ SAE J744
- S7 / CMV 60
- S8 / CMV 85
- S9 / CMV 85
- V6 / CMV 85/115
- V7 / CMV 140/170
- T1 / CMV 115/140/170
- T2 / CMV 170/215

DIN5480
- D3 / CMV 60
- D4 / CMV 60/85
- D5 / CMV 85/115
- D6 / CMV 115/140/170
- D7 / CMV 170/215

SAE J1946
- F4


In the following you will find the technical specifications of the drive shafts. They are clustered according to the related mounting flange and nominal size. First get an overview of the table data showing standard and load capacity of the shafts. Beyond that you will find the dimensions of each shaft in combination with each relevant mounting flange and nominal size. Note the short designations such as „S7“ or „D3“. In the section [Model Code & Availability], you can then check the availability of the flange and auxiliary ports and compile your desired configuration using the short designations as a segment of the model code.

## Dimensions

**E4|XX** **ISO SAE**

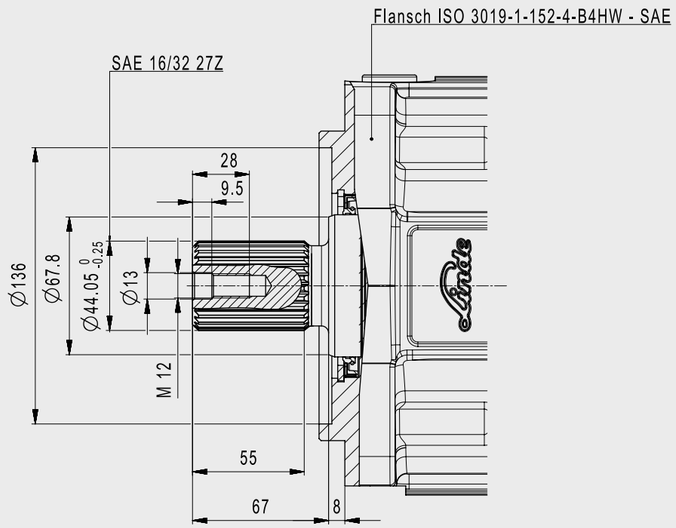


## Dimensions

**CMV60** **ISO METR**

Dimensions
upon request

| | | | |
|---|---|---|---|
| CMV60 | Nominal size 60 | CMV170 | Nominal size 170 |
| CMV85 | Nominal size 85 | CMV215 | Nominal size 215 |
| CMV115 | Nominal size 115 | ISO SAE | Mounting flange ISO 3019-1/ SAE J744 |
| CMV140 | Nominal size 140 | ISO METR | Mounting flange ISO 3019-2 metric |

| | | | |
|---|---|---|---|
| PLUG-IN | Mounting flange Plug-in, similar to ISO 3019-2 | | |
| | | | |
| | | | |
| | | | |

# Technical Specification | Drive Shafts / Comp. Flanges | ISO 3019-1/SAE J744 | **V7 / CMV 140/170**


OVERVIEW
- Key Facts

CONFIGURATION
- Modelcode & Availability

TECHNICAL SPECIFICATION
- General Technical Data
- Operating Parameters
- Controls
- Sensors
- Electric Interfaces
  - Connectors
- Mechanical Interfaces
  - Flanges
  - Shafts
- Hydraulical Interfaces
  - Work Ports
  - Auxiliary Ports
- Functions/Options

ISO 3019-1/ SAE J744
- S7 / CMV 60
- S8 / CMV 85
- S9 / CMV 85
- V6 / CMV 85/115
- V7 / CMV 140/170
- T1 / CMV 115/140/170
- T2 / CMV 170/215

DIN5480
- D3 / CMV 60
- D4 / CMV 60/85
- D5 / CMV 85/115
- D6 / CMV 115/140/170
- D7 / CMV 170/215

SAE J1946
- F4


In the following you will find the technical specifications of the drive shafts. They are clustered according to the related mounting flange and nominal size. First get an overview of the table data showing standard and load capacity of the shafts. Beyond that you will find the dimensions of each shaft in combination with each relevant mounting flange and nominal size. Note the short designations such as „S7“ or „D3“. In the section [Model Code & Availability], you can then check the availability of the flange and auxiliary ports and compile your desired configuration using the short designations as a segment of the model code.

## Dimensions

**E4|XX** **PLUG-IN**

Dimensions upon request

## Dimensions

| | | | |
|---|---|---|---|
| CMV60 | Nominal size 60 | CMV170 | Nominal size 170 |
| CMV85 | Nominal size 85 | CMV215 | Nominal size 215 |
| CMV115 | Nominal size 115 | ISO SAE | Mounting flange ISO 3019-1/ SAE J744 |
| CMV140 | Nominal size 140 | ISO METR | Mounting flange ISO 3019-2 metric |

| | | | |
|---|---|---|---|
| PLUG-IN | Mounting flange Plug-in, similar to ISO 3019-2 | | |
| | | | |
| | | | |
| | | | |

OVERVIEW
Key Facts
CONFIGURATION
Modelcode & Availability
TECHNICAL SPECIFICATION
General Technical Data
Operating Parameters
Controls
Sensors
Electric Interfaces
Connectors
Mechanical Interfaces
Flanges
Shafts
Hydraulical Interfaces
Work Ports
Auxiliary Ports
Functions/Options
ISO 3019-1/ SAE J744
S7 / CMV 60
S8 / CMV 85
S9 / CMV 85
V6 / CMV 85/115
V7 / CMV 140/170
T1 / CMV 115/140/170
T2 / CMV 170/215
DIN5480
D3 / CMV 60
D4 / CMV 60/85
D5 / CMV 85/115
D6 / CMV 115/140/170
D7 / CMV 170/215
SAE J1946
F4

# Technical Specification | Drive Shafts / Comp. Flanges | ISO 3019-1/SAE J744 | **T1 / CMV 115/140/170**

In the following you will find the technical specifications of the drive shafts. They are clustered according to the related mounting flange and nominal size. First get an overview of the table data showing standard and load capacity of the shafts. Beyond that you will find the dimensions of each shaft in combination with each relevant mounting flange and nominal size. Note the short designations such as „S7“ or „D3“. In the section [Model Code & Availability], you can then check the availability of the flange and auxiliary ports and compile your desired configuration using the short designations as a segment of the model code.

| Specification | | | | | | | |
|---|---|---|---|---|---|---|---|
| Shaft end related data | Specification | Standard | | | | ISO 3019-1/SAE J744 | |
| | | Number of teeth | | | | 13 | |
| | | Spline pitch/module | | | | 8/16 | |
| | | Identification code | | | | 44-4 | |
| Nominal size related data | **Nominal size** | | | | | **115** | **140** | **170** |
| | Torque | Maximum torque | | | Nm | 826 | 894 | 879 |
| | Pressure | Maximum differential pressure | | dpmax | bar | 450 | 390 | 325 |
| | Radial forces | 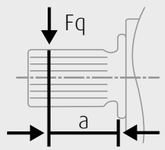 | | $F_{pmax}$ | N | 15000 | 16000 | 11550 |
| | | | | a | mm | 33.5 | 33.5 | 33.5 |
| | Axial forces | 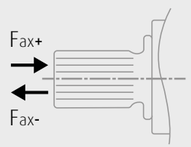 | Motor at standstill or in rotation considering unpressurized work ports | Fax+ | N | 0 | 0 | 0 |
| | | | | Fax- | N | 1000 | 1210 | 1200 |
| | | | Work ports pressurized | Fax+/p | N/bar | 11 | 12.4 | 15.1 |

# Technical Specification | Drive Shafts / Comp. Flanges | ISO 3019-1/SAE J744 | **T1 / CMV 115/140/170**


OVERVIEW
- Key Facts

CONFIGURATION
- Modelcode & Availability

TECHNICAL SPECIFICATION
- General Technical Data
- Operating Parameters
- Controls
- Sensors
- Electric Interfaces
  - Connectors
- Mechanical Interfaces
  - Flanges
  - Shafts
- Hydraulical Interfaces
  - Work Ports
  - Auxiliary Ports
- Functions/Options

ISO 3019-1/ SAE J744
- S7 / CMV 60
- S8 / CMV 85
- S9 / CMV 85
- V6 / CMV 85/115
- V7 / CMV 140/170
- T1 / CMV 115/140/170
- T2 / CMV 170/215

DIN5480
- D3 / CMV 60
- D4 / CMV 60/85
- D5 / CMV 85/115
- D6 / CMV 115/140/170
- D7 / CMV 170/215

SAE J1946
- F4


In the following you will find the technical specifications of the drive shafts. They are clustered according to the related mounting flange and nominal size. First get an overview of the table data showing standard and load capacity of the shafts. Beyond that you will find the dimensions of each shaft in combination with each relevant mounting flange and nominal size. Note the short designations such as „S7“ or „D3“. In the section [Model Code & Availability], you can then check the availability of the flange and auxiliary ports and compile your desired configuration using the short designations as a segment of the model code.

## Dimensions

**E4|XX** **ISO SAE**

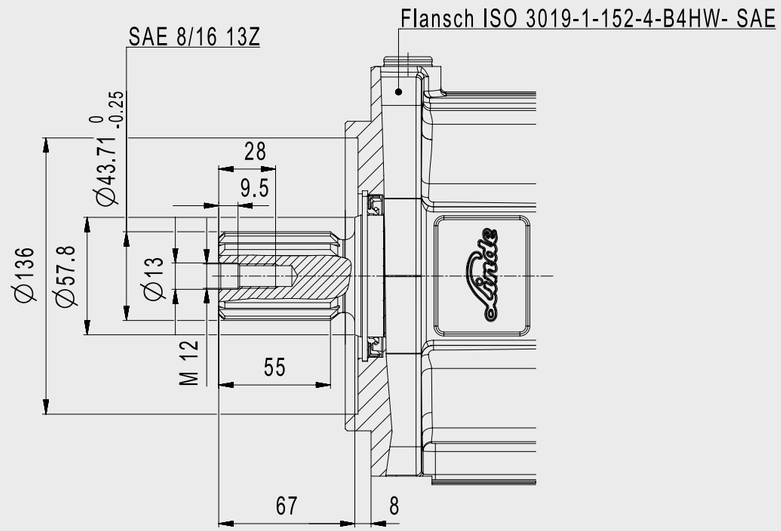


## Dimensions

**CMV60** **ISO METR**

Dimensions
upon request

| | | | |
|---|---|---|---|
| CMV60 | Nominal size 60 | CMV170 | Nominal size 170 |
| CMV85 | Nominal size 85 | CMV215 | Nominal size 215 |
| CMV115 | Nominal size 115 | ISO SAE | Mounting flange ISO 3019-1/ SAE J744 |
| CMV140 | Nominal size 140 | ISO METR | Mounting flange ISO 3019-2 metric |

| | | | |
|---|---|---|---|
| PLUG-IN | Mounting flange Plug-in, similar to ISO 3019-2 | | |
| | | | |
| | | | |
| | | | |

# Technical Specification | Drive Shafts / Comp. Flanges | ISO 3019-1/SAE J744 | **T1 / CMV 115/140/170**


OVERVIEW
- Key Facts

CONFIGURATION
- Modelcode & Availability

TECHNICAL SPECIFICATION
- General Technical Data
- Operating Parameters
- Controls
- Sensors
- Electric Interfaces
  - Connectors
- Mechanical Interfaces
  - Flanges
  - Shafts
- Hydraulical Interfaces
  - Work Ports
  - Auxiliary Ports
- Functions/Options

ISO 3019-1/ SAE J744
- S7 / CMV 60
- S8 / CMV 85
- S9 / CMV 85
- V6 / CMV 85/115
- V7 / CMV 140/170
- T1 / CMV 115/140/170
- T2 / CMV 170/215

DIN5480
- D3 / CMV 60
- D4 / CMV 60/85
- D5 / CMV 85/115
- D6 / CMV 115/140/170
- D7 / CMV 170/215

SAE J1946
- F4


In the following you will find the technical specifications of the drive shafts. They are clustered according to the related mounting flange and nominal size. First get an overview of the table data showing standard and load capacity of the shafts. Beyond that you will find the dimensions of each shaft in combination with each relevant mounting flange and nominal size. Note the short designations such as „S7“ or „D3“. In the section [Model Code & Availability], you can then check the availability of the flange and auxiliary ports and compile your desired configuration using the short designations as a segment of the model code.

## Dimensions

**E4|XX** **PLUG-IN**

Dimensions
upon request

## Dimensions

| | | | |
|---|---|---|---|
| CMV60 | Nominal size 60 | CMV170 | Nominal size 170 |
| CMV85 | Nominal size 85 | CMV215 | Nominal size 215 |
| CMV115 | Nominal size 115 | ISO SAE | Mounting flange ISO 3019-1/ SAE J744 |
| CMV140 | Nominal size 140 | ISO METR | Mounting flange ISO 3019-2 metric |

| | | | |
|---|---|---|---|
| PLUG-IN | Mounting flange Plug-in, similar to ISO 3019-2 | | |
| | | | |
| | | | |
| | | | |

# Technical Specification | Drive Shafts / Comp. Flanges | ISO 3019-1/SAE J744 | **T1 / CMV 115/140/170**


OVERVIEW
- Key Facts

CONFIGURATION
- Modelcode & Availability

TECHNICAL SPECIFICATION
- General Technical Data
- Operating Parameters
- Controls
- Sensors
- Electric Interfaces
  - Connectors
- Mechanical Interfaces
  - Flanges
  - Shafts
- Hydraulical Interfaces
  - Work Ports
  - Auxiliary Ports
- Functions/Options

ISO 3019-1/ SAE J744
- S7 / CMV 60
- S8 / CMV 85
- S9 / CMV 85
- V6 / CMV 85/115
- V7 / CMV 140/170
- T1 / CMV 115/140/170
- T2 / CMV 170/215

DIN5480
- D3 / CMV 60
- D4 / CMV 60/85
- D5 / CMV 85/115
- D6 / CMV 115/140/170
- D7 / CMV 170/215

SAE J1946
- F4


In the following you will find the technical specifications of the drive shafts. They are clustered according to the related mounting flange and nominal size. First get an overview of the table data showing standard and load capacity of the shafts. Beyond that you will find the dimensions of each shaft in combination with each relevant mounting flange and nominal size. Note the short designations such as „S7“ or „D3“. In the section [Model Code & Availability], you can then check the availability of the flange and auxiliary ports and compile your desired configuration using the short designations as a segment of the model code.

## Dimensions

**E4|XX** **ISO SAE**

Dimensions
upon request

## Dimensions

**CMV60** **ISO METR**

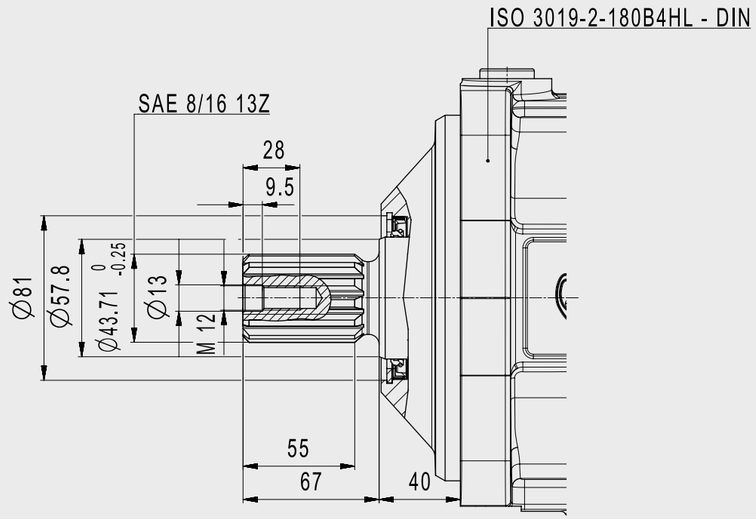


| | | | |
|---|---|---|---|
| CMV60 | Nominal size 60 | CMV170 | Nominal size 170 |
| CMV85 | Nominal size 85 | CMV215 | Nominal size 215 |
| CMV115 | Nominal size 115 | ISO SAE | Mounting flange ISO 3019-1/ SAE J744 |
| CMV140 | Nominal size 140 | ISO METR | Mounting flange ISO 3019-2 metric |

| | | | |
|---|---|---|---|
| PLUG-IN | Mounting flange Plug-in, similar to ISO 3019-2 | | |
| | | | |
| | | | |
| | | | |

# Technical Specification | Drive Shafts / Comp. Flanges | ISO 3019-1/SAE J744 | **T1 / CMV 115/140/170**


OVERVIEW
- Key Facts

CONFIGURATION
- Modelcode & Availability

TECHNICAL SPECIFICATION
- General Technical Data
- Operating Parameters
- Controls
- Sensors
- Electric Interfaces
  - Connectors
- Mechanical Interfaces
  - Flanges
  - Shafts
- Hydraulical Interfaces
  - Work Ports
  - Auxiliary Ports
- Functions/Options

ISO 3019-1/ SAE J744
- S7 / CMV 60
- S8 / CMV 85
- S9 / CMV 85
- V6 / CMV 85/115
- V7 / CMV 140/170
- T1 / CMV 115/140/170
- T2 / CMV 170/215

DIN5480
- D3 / CMV 60
- D4 / CMV 60/85
- D5 / CMV 85/115
- D6 / CMV 115/140/170
- D7 / CMV 170/215

SAE J1946
- F4


In the following you will find the technical specifications of the drive shafts. They are clustered according to the related mounting flange and nominal size. First get an overview of the table data showing standard and load capacity of the shafts. Beyond that you will find the dimensions of each shaft in combination with each relevant mounting flange and nominal size. Note the short designations such as „S7“ or „D3“. In the section [Model Code & Availability], you can then check the availability of the flange and auxiliary ports and compile your desired configuration using the short designations as a segment of the model code.

## Dimensions

**E4|XX** **PLUG-IN**

Dimensions
upon request

## Dimensions

| | | | |
|---|---|---|---|
| CMV60 | Nominal size 60 | CMV170 | Nominal size 170 |
| CMV85 | Nominal size 85 | CMV215 | Nominal size 215 |
| CMV115 | Nominal size 115 | ISO SAE | Mounting flange ISO 3019-1/ SAE J744 |
| CMV140 | Nominal size 140 | ISO METR | Mounting flange ISO 3019-2 metric |

| | | | |
|---|---|---|---|
| PLUG-IN | Mounting flange Plug-in, similar to ISO 3019-2 | | |
| | | | |
| | | | |
| | | | |

# Technical Specification | Drive Shafts / Comp. Flanges | ISO 3019-1/SAE J744 | **T1 / CMV 115/140/170**


OVERVIEW
- Key Facts

CONFIGURATION
- Modelcode & Availability

TECHNICAL SPECIFICATION
- General Technical Data
- Operating Parameters
- Controls
- Sensors
- Electric Interfaces
  - Connectors
- Mechanical Interfaces
  - Flanges
  - Shafts
- Hydraulical Interfaces
  - Work Ports
  - Auxiliary Ports
- Functions/Options

ISO 3019-1/ SAE J744
- S7 / CMV 60
- S8 / CMV 85
- S9 / CMV 85
- V6 / CMV 85/115
- V7 / CMV 140/170
- T1 / CMV 115/140/170
- T2 / CMV 170/215

DIN5480
- D3 / CMV 60
- D4 / CMV 60/85
- D5 / CMV 85/115
- D6 / CMV 115/140/170
- D7 / CMV 170/215

SAE J1946
- F4


In the following you will find the technical specifications of the drive shafts. They are clustered according to the related mounting flange and nominal size. First get an overview of the table data showing standard and load capacity of the shafts. Beyond that you will find the dimensions of each shaft in combination with each relevant mounting flange and nominal size. Note the short designations such as „S7“ or „D3“. In the section [Model Code & Availability], you can then check the availability of the flange and auxiliary ports and compile your desired configuration using the short designations as a segment of the model code.

## Dimensions

**E4|XX** **ISO SAE**

Dimensions
upon request

## Dimensions

**CMV60** **ISO METR**

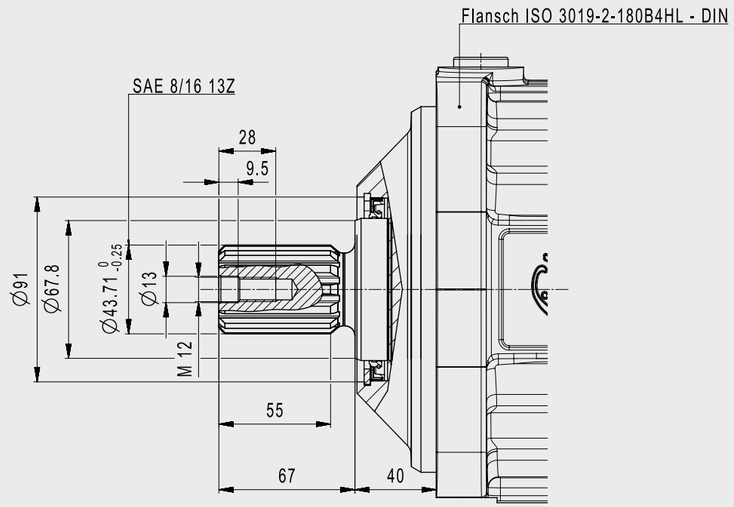


| | | | |
|---|---|---|---|
| CMV60 | Nominal size 60 | CMV170 | Nominal size 170 |
| CMV85 | Nominal size 85 | CMV215 | Nominal size 215 |
| CMV115 | Nominal size 115 | ISO SAE | Mounting flange ISO 3019-1/ SAE J744 |
| CMV140 | Nominal size 140 | ISO METR | Mounting flange ISO 3019-2 metric |

| | | | |
|---|---|---|---|
| PLUG-IN | Mounting flange Plug-in, similar to ISO 3019-2 | | |
| | | | |
| | | | |
| | | | |

# Technical Specification | Drive Shafts / Comp. Flanges | ISO 3019-1/SAE J744 | **T1 / CMV 115/140/170**


OVERVIEW
- Key Facts

CONFIGURATION
- Modelcode & Availability

TECHNICAL SPECIFICATION
- General Technical Data
- Operating Parameters
- Controls
- Sensors
- Electric Interfaces
  - Connectors
- Mechanical Interfaces
  - Flanges
  - Shafts
- Hydraulical Interfaces
  - Work Ports
  - Auxiliary Ports
- Functions/Options

ISO 3019-1/ SAE J744
- S7 / CMV 60
- S8 / CMV 85
- S9 / CMV 85
- V6 / CMV 85/115
- V7 / CMV 140/170
- T1 / CMV 115/140/170
- T2 / CMV 170/215

DIN5480
- D3 / CMV 60
- D4 / CMV 60/85
- D5 / CMV 85/115
- D6 / CMV 115/140/170
- D7 / CMV 170/215

SAE J1946
- F4


In the following you will find the technical specifications of the drive shafts. They are clustered according to the related mounting flange and nominal size. First get an overview of the table data showing standard and load capacity of the shafts. Beyond that you will find the dimensions of each shaft in combination with each relevant mounting flange and nominal size. Note the short designations such as „S7“ or „D3“. In the section [Model Code & Availability], you can then check the availability of the flange and auxiliary ports and compile your desired configuration using the short designations as a segment of the model code.

## Dimensions

**E4|XX** **PLUG-IN**

Dimensions
upon request

## Dimensions

| | | | |
|---|---|---|---|
| CMV60 | Nominal size 60 | CMV170 | Nominal size 170 |
| CMV85 | Nominal size 85 | CMV215 | Nominal size 215 |
| CMV115 | Nominal size 115 | ISO SAE | Mounting flange ISO 3019-1/ SAE J744 |
| CMV140 | Nominal size 140 | ISO METR | Mounting flange ISO 3019-2 metric |

| | | | |
|---|---|---|---|
| PLUG-IN | Mounting flange Plug-in, similar to ISO 3019-2 | | |
| | | | |
| | | | |
| | | | |

OVERVIEW
Key Facts
CONFIGURATION
Modelcode & Availability
TECHNICAL SPECIFICATION
General Technical Data
Operating Parameters
Controls
Sensors
Electric Interfaces
Connectors
Mechanical Interfaces
Flanges
Shafts
Hydraulical Interfaces
Work Ports
Auxiliary Ports
Functions/Options
ISO 3019-1/ SAE J744
S7 / CMV 60
S8 / CMV 85
S9 / CMV 85
V6 / CMV 85/115
V7 / CMV 140/170
T1 / CMV 115/140/170
T2 / CMV 170/215
DIN5480
D3 / CMV 60
D4 / CMV 60/85
D5 / CMV 85/115
D6 / CMV 115/140/170
D7 / CMV 170/215
SAE J1946
F4

# Technical Specification | Drive Shafts / Comp. Flanges | ISO 3019-1/SAE J744 | **T2 / CMV 170/215**

In the following you will find the technical specifications of the drive shafts. They are clustered according to the related mounting flange and nominal size. First get an overview of the table data showing standard and load capacity of the shafts. Beyond that you will find the dimensions of each shaft in combination with each relevant mounting flange and nominal size. Note the short designations such as „S7“ or „D3“. In the section [Model Code & Availability], you can then check the availability of the flange and auxiliary ports and compile your desired configuration using the short designations as a segment of the model code.

| Specification | | | | | | | |
|---|---|---|---|---|---|---|---|
| Shaft end related data | Specification | Standard | | | | ISO 3019-1/SAE J744 | |
| | | Number of teeth | | | | 15 | |
| | | Spline pitch/module | | | | 8/16 | |
| | | Identification code | | | | 50-4 | |
| Nominal size related data | **Nominal size** | | | | | **170** | **215** |
| | Torque | Maximum torque | | | Nm | 1218 | 1457 |
| | Pressure | Maximum differential pressure | | dpmax | bar | 450 | 420 |
| | Radial forces | 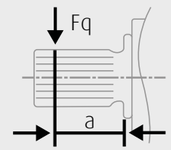  | | $F_{pmax}$ | N | 19400 | 22600 |
| | | | | a | mm | 33.5 | 33.5 |
| | Axial forces | 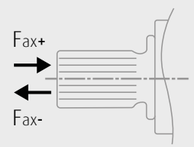  | Motor at standstill or in rotation considering unpressurized work ports | Fax+ | N | 0 | 0 |
| | | | | Fax- | N | 1200 | 1250 |
| | | | Work ports pressurized | Fax+/p | N/bar | 15.1 | 17 |

# Technical Specification | Drive Shafts / Comp. Flanges | ISO 3019-1/SAE J744 | **T2 / CMV 170/215**


OVERVIEW
- Key Facts

CONFIGURATION
- Modelcode & Availability

TECHNICAL SPECIFICATION
- General Technical Data
- Operating Parameters
- Controls
- Sensors
- Electric Interfaces
  - Connectors
- Mechanical Interfaces
  - Flanges
  - Shafts
- Hydraulical Interfaces
  - Work Ports
  - Auxiliary Ports
- Functions/Options

ISO 3019-1/ SAE J744
- S7 / CMV 60
- S8 / CMV 85
- S9 / CMV 85
- V6 / CMV 85/115
- V7 / CMV 140/170
- T1 / CMV 115/140/170
- T2 / CMV 170/215

DIN5480
- D3 / CMV 60
- D4 / CMV 60/85
- D5 / CMV 85/115
- D6 / CMV 115/140/170
- D7 / CMV 170/215

SAE J1946
- F4


In the following you will find the technical specifications of the drive shafts. They are clustered according to the related mounting flange and nominal size. First get an overview of the table data showing standard and load capacity of the shafts. Beyond that you will find the dimensions of each shaft in combination with each relevant mounting flange and nominal size. Note the short designations such as „S7“ or „D3“. In the section [Model Code & Availability], you can then check the availability of the flange and auxiliary ports and compile your desired configuration using the short designations as a segment of the model code.

## Dimensions

**E4|XX** **ISO SAE**

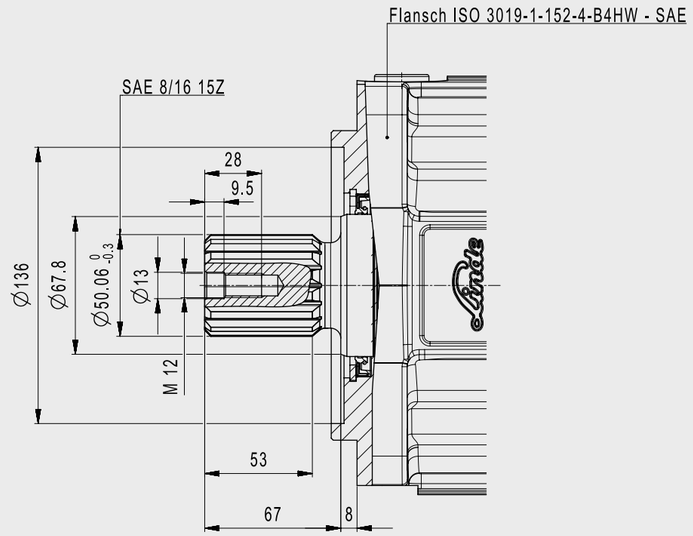


## Dimensions

**CMV60** **ISO METR**

Dimensions upon request

| | | | |
|---|---|---|---|
| CMV60 | Nominal size 60 | CMV170 | Nominal size 170 |
| CMV85 | Nominal size 85 | CMV215 | Nominal size 215 |
| CMV115 | Nominal size 115 | ISO SAE | Mounting flange ISO 3019-1/ SAE J744 |
| CMV140 | Nominal size 140 | ISO METR | Mounting flange ISO 3019-2 metric |

| | | | |
|---|---|---|---|
| PLUG-IN | Mounting flange Plug-in, similar to ISO 3019-2 | | |
| | | | |
| | | | |
| | | | |

# Technical Specification | Drive Shafts / Comp. Flanges | ISO 3019-1/SAE J744 | **T2 / CMV 170/215**


OVERVIEW
- Key Facts

CONFIGURATION
- Modelcode & Availability

TECHNICAL SPECIFICATION
- General Technical Data
- Operating Parameters
- Controls
- Sensors
- Electric Interfaces
  - Connectors
- Mechanical Interfaces
  - Flanges
  - Shafts
- Hydraulical Interfaces
  - Work Ports
  - Auxiliary Ports
- Functions/Options

ISO 3019-1/ SAE J744
- S7 / CMV 60
- S8 / CMV 85
- S9 / CMV 85
- V6 / CMV 85/115
- V7 / CMV 140/170
- T1 / CMV 115/140/170
- T2 / CMV 170/215

DIN5480
- D3 / CMV 60
- D4 / CMV 60/85
- D5 / CMV 85/115
- D6 / CMV 115/140/170
- D7 / CMV 170/215

SAE J1946
- F4


In the following you will find the technical specifications of the drive shafts. They are clustered according to the related mounting flange and nominal size. First get an overview of the table data showing standard and load capacity of the shafts. Beyond that you will find the dimensions of each shaft in combination with each relevant mounting flange and nominal size. Note the short designations such as „S7“ or „D3“. In the section [Model Code & Availability], you can then check the availability of the flange and auxiliary ports and compile your desired configuration using the short designations as a segment of the model code.

## Dimensions

**E4|XX** **PLUG-IN**

Dimensions upon request

## Dimensions

| | | | |
|---|---|---|---|
| CMV60 | Nominal size 60 | CMV170 | Nominal size 170 |
| CMV85 | Nominal size 85 | CMV215 | Nominal size 215 |
| CMV115 | Nominal size 115 | ISO SAE | Mounting flange ISO 3019-1/ SAE J744 |
| CMV140 | Nominal size 140 | ISO METR | Mounting flange ISO 3019-2 metric |

| | | | |
|---|---|---|---|
| PLUG-IN | Mounting flange Plug-in, similar to ISO 3019-2 | | |
| | | | |
| | | | |
| | | | |

# Technical Specification | Drive Shafts / Comp. Flanges | ISO 3019-1/SAE J744 | **T2 / CMV 170/215**


OVERVIEW
- Key Facts

CONFIGURATION
- Modelcode & Availability

TECHNICAL SPECIFICATION
- General Technical Data
- Operating Parameters
- Controls
- Sensors
- Electric Interfaces
  - Connectors
- Mechanical Interfaces
  - Flanges
  - Shafts
- Hydraulical Interfaces
  - Work Ports
  - Auxiliary Ports
- Functions/Options

ISO 3019-1/ SAE J744
- S7 / CMV 60
- S8 / CMV 85
- S9 / CMV 85
- V6 / CMV 85/115
- V7 / CMV 140/170
- T1 / CMV 115/140/170
- T2 / CMV 170/215

DIN5480
- D3 / CMV 60
- D4 / CMV 60/85
- D5 / CMV 85/115
- D6 / CMV 115/140/170
- D7 / CMV 170/215

SAE J1946
- F4


In the following you will find the technical specifications of the drive shafts. They are clustered according to the related mounting flange and nominal size. First get an overview of the table data showing standard and load capacity of the shafts. Beyond that you will find the dimensions of each shaft in combination with each relevant mounting flange and nominal size. Note the short designations such as „S7“ or „D3“. In the section [Model Code & Availability], you can then check the availability of the flange and auxiliary ports and compile your desired configuration using the short designations as a segment of the model code.

## Dimensions

**E4|XX** **ISO SAE**

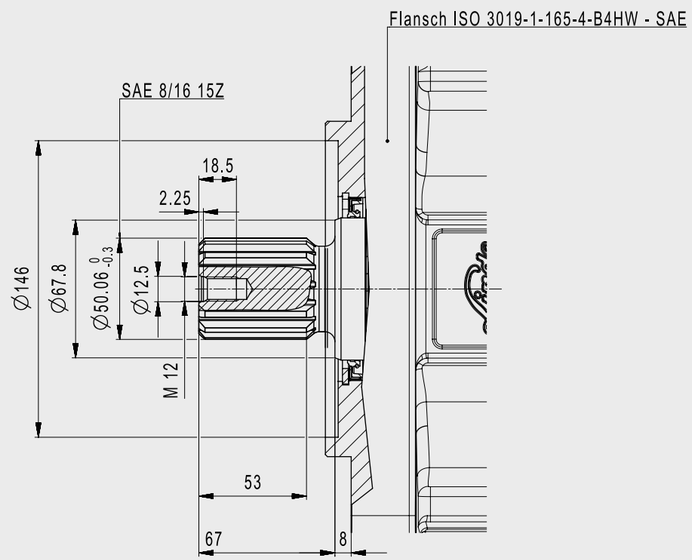


## Dimensions

**CMV60** **ISO METR**

Dimensions
upon request

| | | | |
|---|---|---|---|
| CMV60 | Nominal size 60 | CMV170 | Nominal size 170 |
| CMV85 | Nominal size 85 | CMV215 | Nominal size 215 |
| CMV115 | Nominal size 115 | ISO SAE | Mounting flange ISO 3019-1/ SAE J744 |
| CMV140 | Nominal size 140 | ISO METR | Mounting flange ISO 3019-2 metric |

| | | | |
|---|---|---|---|
| PLUG-IN | Mounting flange Plug-in, similar to ISO 3019-2 | | |
| | | | |
| | | | |
| | | | |

# Technical Specification | Drive Shafts / Comp. Flanges | ISO 3019-1/SAE J744 | **T2 / CMV 170/215**


OVERVIEW
- Key Facts

CONFIGURATION
- Modelcode & Availability

TECHNICAL SPECIFICATION
- General Technical Data
- Operating Parameters
- Controls
- Sensors
- Electric Interfaces
  - Connectors
- Mechanical Interfaces
  - Flanges
  - Shafts
- Hydraulical Interfaces
  - Work Ports
  - Auxiliary Ports
- Functions/Options

ISO 3019-1/ SAE J744
- S7 / CMV 60
- S8 / CMV 85
- S9 / CMV 85
- V6 / CMV 85/115
- V7 / CMV 140/170
- T1 / CMV 115/140/170
- T2 / CMV 170/215

DIN5480
- D3 / CMV 60
- D4 / CMV 60/85
- D5 / CMV 85/115
- D6 / CMV 115/140/170
- D7 / CMV 170/215

SAE J1946
- F4


In the following you will find the technical specifications of the drive shafts. They are clustered according to the related mounting flange and nominal size. First get an overview of the table data showing standard and load capacity of the shafts. Beyond that you will find the dimensions of each shaft in combination with each relevant mounting flange and nominal size. Note the short designations such as „S7“ or „D3“. In the section [Model Code & Availability], you can then check the availability of the flange and auxiliary ports and compile your desired configuration using the short designations as a segment of the model code.

## Dimensions

**E4|XX** **PLUG-IN**

Dimensions upon request

## Dimensions

| | | | |
|---|---|---|---|
| CMV60 | Nominal size 60 | CMV170 | Nominal size 170 |
| CMV85 | Nominal size 85 | CMV215 | Nominal size 215 |
| CMV115 | Nominal size 115 | ISO SAE | Mounting flange ISO 3019-1/ SAE J744 |
| CMV140 | Nominal size 140 | ISO METR | Mounting flange ISO 3019-2 metric |

| | | | |
|---|---|---|---|
| PLUG-IN | Mounting flange Plug-in, similar to ISO 3019-2 | | |
| | | | |
| | | | |
| | | | |

OVERVIEW
Key Facts
CONFIGURATION
Modelcode & Availability
TECHNICAL SPECIFICATION
General Technical Data
Operating Parameters
Controls
Sensors
Electric Interfaces
Connectors
Mechanical Interfaces
Flanges
Shafts
Hydraulical Interfaces
Work Ports
Auxiliary Ports
Functions/Options
ISO 3019-1/ SAE J744
S7 / CMV 60
S8 / CMV 85
S9 / CMV 85
V6 / CMV 85/115
V7 / CMV 140/170
T1 / CMV 115/140/170
T2 / CMV 170/215
DIN5480
D3 / CMV 60
D4 / CMV 60/85
D5 / CMV 85/115
D6 / CMV 115/140/170
D7 / CMV 170/215
SAE J1946
F4

# Technical Specification | Drive Shafts / Comp. Flanges | DIN 5480 | **D3 / CMV 60**

In the following you will find the technical specifications of the drive shafts. They are clustered according to the related mounting flange and nominal size. First get an overview of the table data showing standard and load capacity of the shafts. Beyond that you will find the dimensions of each shaft in combination with each relevant mounting flange and nominal size. Note the short designations such as „S7“ or „D3“. In the section [Model Code & Availability], you can then check the availability of the flange and auxiliary ports and compile your desired configuration using the short designations as a segment of the model code.

| Specification | | | | | | |
|---|---|---|---|---|---|---|
| Shaft end related data | Specification | Standard | | | | DIN 5480 |
| | | Number of teeth | | | | 14 |
| | | Spline pitch/module | | | | 2 |
| | | Identification code | | | | W30 |
| Nominal size related data | **Nominal size** | | | | | **60** |
| | Torque | Maximum torque | | | Nm | upon request |
| | Pressure | Maximum differential pressure | | dpmax | bar | upon request |
| | Radial forces | 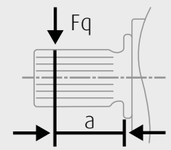  | | $F_{pmax}$ | N | upon request |
| | | | a | a | mm | upon request |
| | Axial forces | 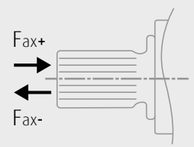  | Motor at standstill or in rotation considering unpressurized work ports | Fax+ | N | upon request |
| | | | | Fax- | N | upon request |
| | | | Work ports pressurized | Fax+/p | N/bar | upon request |

# Technical Specification | Drive Shafts / Comp. Flanges | DIN 5480 | **D3 / CMV 60**


OVERVIEW
- Key Facts

CONFIGURATION
- Modelcode & Availability

TECHNICAL SPECIFICATION
- General Technical Data
- Operating Parameters
- Controls
- Sensors
- Electric Interfaces
  - Connectors
- Mechanical Interfaces
  - Flanges
  - Shafts
- Hydraulical Interfaces
  - Work Ports
  - Auxiliary Ports
- Functions/Options

ISO 3019-1/ SAE J744
- S7 / CMV 60
- S8 / CMV 85
- S9 / CMV 85
- V6 / CMV 85/115
- V7 / CMV 140/170
- T1 / CMV 115/140/170
- T2 / CMV 170/215

DIN5480
- D3 / CMV 60
- D4 / CMV 60/85
- D5 / CMV 85/115
- D6 / CMV 115/140/170
- D7 / CMV 170/215

SAE J1946
- F4


In the following you will find the technical specifications of the drive shafts. They are clustered according to the related mounting flange and nominal size. First get an overview of the table data showing standard and load capacity of the shafts. Beyond that you will find the dimensions of each shaft in combination with each relevant mounting flange and nominal size. Note the short designations such as „S7“ or „D3“. In the section [Model Code & Availability], you can then check the availability of the flange and auxiliary ports and compile your desired configuration using the short designations as a segment of the model code.

## Dimensions

E4|XX ISO SAE

Dimensions upon request

## Dimensions

CMV60 ISO METR

Dimensions upon request

| | | | |
|---|---|---|---|
| CMV60 | Nominal size 60 | CMV170 | Nominal size 170 |
| CMV85 | Nominal size 85 | CMV215 | Nominal size 215 |
| CMV115 | Nominal size 115 | ISO SAE | Mounting flange ISO 3019-1/ SAE J744 |
| CMV140 | Nominal size 140 | ISO METR | Mounting flange ISO 3019-2 metric |

| | | | |
|---|---|---|---|
| PLUG-IN | Mounting flange Plug-in, similar to ISO 3019-2 | | |
| | | | |
| | | | |
| | | | |

# Technical Specification | Drive Shafts / Comp. Flanges | DIN 5480 | **D3 / CMV 60**


OVERVIEW
- Key Facts

CONFIGURATION
- Modelcode & Availability

TECHNICAL SPECIFICATION
- General Technical Data
- Operating Parameters
- Controls
- Sensors
- Electric Interfaces
  - Connectors
- Mechanical Interfaces
  - Flanges
  - Shafts
- Hydraulical Interfaces
  - Work Ports
  - Auxiliary Ports
- Functions/Options

ISO 3019-1/ SAE J744
- S7 / CMV 60
- S8 / CMV 85
- S9 / CMV 85
- V6 / CMV 85/115
- V7 / CMV 140/170
- T1 / CMV 115/140/170
- T2 / CMV 170/215

DIN5480
- D3 / CMV 60
- D4 / CMV 60/85
- D5 / CMV 85/115
- D6 / CMV 115/140/170
- D7 / CMV 170/215

SAE J1946
- F4


In the following you will find the technical specifications of the drive shafts. They are clustered according to the related mounting flange and nominal size. First get an overview of the table data showing standard and load capacity of the shafts. Beyond that you will find the dimensions of each shaft in combination with each relevant mounting flange and nominal size. Note the short designations such as „S7“ or „D3“. In the section [Model Code & Availability], you can then check the availability of the flange and auxiliary ports and compile your desired configuration using the short designations as a segment of the model code.

## Dimensions

**E4|XX** **PLUG-IN**

Dimensions
upon request

## Dimensions

| | | | |
|---|---|---|---|
| CMV60 | Nominal size 60 | CMV170 | Nominal size 170 |
| CMV85 | Nominal size 85 | CMV215 | Nominal size 215 |
| CMV115 | Nominal size 115 | ISO SAE | Mounting flange ISO 3019-1/ SAE J744 |
| CMV140 | Nominal size 140 | ISO METR | Mounting flange ISO 3019-2 metric |

| | | | |
|---|---|---|---|
| PLUG-IN | Mounting flange Plug-in, similar to ISO 3019-2 | | |
| | | | |
| | | | |
| | | | |

OVERVIEW
Key Facts
CONFIGURATION
Modelcode & Availability
TECHNICAL SPECIFICATION
General Technical Data
Operating Parameters
Controls
Sensors
Electric Interfaces
Connectors
Mechanical Interfaces
Flanges
Shafts
Hydraulical Interfaces
Work Ports
Auxiliary Ports
Functions/Options
ISO 3019-1/ SAE J744
S7 / CMV 60
S8 / CMV 85
S9 / CMV 85
V6 / CMV 85/115
V7 / CMV 140/170
T1 / CMV 115/140/170
T2 / CMV 170/215
DIN5480
D3 / CMV 60
D4 / CMV 60/85
D5 / CMV 85/115
D6 / CMV 115/140/170
D7 / CMV 170/215
SAE J1946
F4

# Technical Specification | Drive Shafts / Comp. Flanges | DIN 5480 | **D4 / CMV 60/85**

In the following you will find the technical specifications of the drive shafts. They are clustered according to the related mounting flange and nominal size. First get an overview of the table data showing standard and load capacity of the shafts. Beyond that you will find the dimensions of each shaft in combination with each relevant mounting flange and nominal size. Note the short designations such as „S7“ or „D3“. In the section [Model Code & Availability], you can then check the availability of the flange and auxiliary ports and compile your desired configuration using the short designations as a segment of the model code.

| Specification | | | | | | | | |
|---|---|---|---|---|---|---|---|---|
| Shaft end related data | Specification | Standard | | | | DIN 5480 | | |
| | | Number of teeth | | | | 16 | | |
| | | Spline pitch/module | | | | 2 | | |
| | | Identification code | | | | W35 | | |
| Nominal size related data | **Nominal size** | | | | | **60** | **85** | |
| | Torque | Maximum torque | | | Nm | 444 | upon request | |
| | Pressure | Maximum differential pressure | | dpmax | bar | 450 | upon request | |
| | Radial forces | 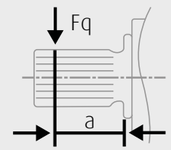 | | $F_{pmax}$ | N | 10300 | upon request | |
| | | | | a | mm | 20 | upon request | |
| | Axial forces | 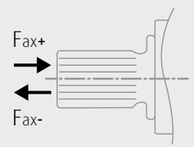 | Motor at standstill or in rotation considering unpressurized work ports | Fax+ | N | 0 | upon request | |
| | | | | Fax- | N | 500 | upon request | |
| | | | Work ports pressurized | Fax+/p | N/bar | 7.5 | upon request | |

# Technical Specification | Drive Shafts / Comp. Flanges | DIN 5480 | **D4 / CMV 60/85**


OVERVIEW
- Key Facts

CONFIGURATION
- Modelcode & Availability

TECHNICAL SPECIFICATION
- General Technical Data
- Operating Parameters
- Controls
- Sensors
- Electric Interfaces
  - Connectors
- Mechanical Interfaces
  - Flanges
  - Shafts
- Hydraulical Interfaces
  - Work Ports
  - Auxiliary Ports
- Functions/Options

ISO 3019-1/ SAE J744
- S7 / CMV 60
- S8 / CMV 85
- S9 / CMV 85
- V6 / CMV 85/115
- V7 / CMV 140/170
- T1 / CMV 115/140/170
- T2 / CMV 170/215

DIN5480
- D3 / CMV 60
- D4 / CMV 60/85
- D5 / CMV 85/115
- D6 / CMV 115/140/170
- D7 / CMV 170/215

SAE J1946
- F4


In the following you will find the technical specifications of the drive shafts. They are clustered according to the related mounting flange and nominal size. First get an overview of the table data showing standard and load capacity of the shafts. Beyond that you will find the dimensions of each shaft in combination with each relevant mounting flange and nominal size. Note the short designations such as „S7“ or „D3“. In the section [Model Code & Availability], you can then check the availability of the flange and auxiliary ports and compile your desired configuration using the short designations as a segment of the model code.

## Dimensions

E4|XX ISO SAE

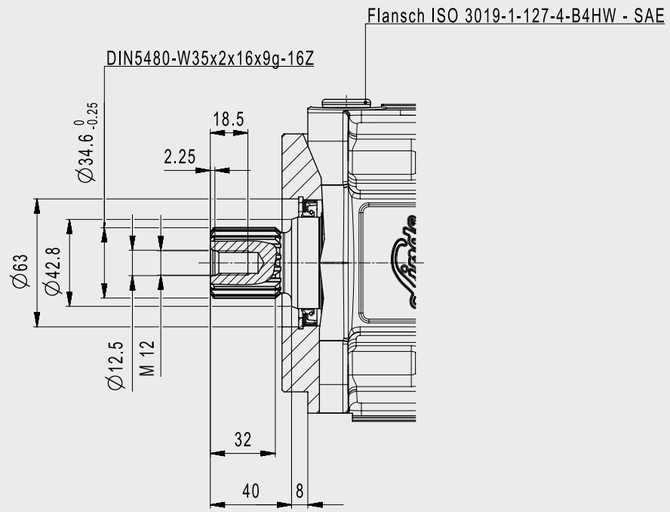


| | | | |
|---|---|---|---|
| CMV60 | Nominal size 60 | CMV170 | Nominal size 170 |
| CMV85 | Nominal size 85 | CMV215 | Nominal size 215 |
| CMV115 | Nominal size 115 | ISO SAE | Mounting flange ISO 3019-1/ SAE J744 |
| CMV140 | Nominal size 140 | ISO METR | Mounting flange ISO 3019-2 metric |

## Dimensions

CMV60 ISO METR

Dimensions upon request

| | | | |
|---|---|---|---|
| PLUG-IN | Mounting flange Plug-in, similar to ISO 3019-2 | | |
| | | | |
| | | | |
| | | | |

# Technical Specification | Drive Shafts / Comp. Flanges | DIN 5480 | **D4 / CMV 60/85**


OVERVIEW
- Key Facts

CONFIGURATION
- Modelcode & Availability

TECHNICAL SPECIFICATION
- General Technical Data
- Operating Parameters
- Controls
- Sensors
- Electric Interfaces
  - Connectors
- Mechanical Interfaces
  - Flanges
  - Shafts
- Hydraulical Interfaces
  - Work Ports
  - Auxiliary Ports
- Functions/Options

ISO 3019-1/ SAE J744
- S7 / CMV 60
- S8 / CMV 85
- S9 / CMV 85
- V6 / CMV 85/115
- V7 / CMV 140/170
- T1 / CMV 115/140/170
- T2 / CMV 170/215

DIN5480
- D3 / CMV 60
- D4 / CMV 60/85
- D5 / CMV 85/115
- D6 / CMV 115/140/170
- D7 / CMV 170/215

SAE J1946
- F4


In the following you will find the technical specifications of the drive shafts. They are clustered according to the related mounting flange and nominal size. First get an overview of the table data showing standard and load capacity of the shafts. Beyond that you will find the dimensions of each shaft in combination with each relevant mounting flange and nominal size. Note the short designations such as „S7“ or „D3“. In the section [Model Code & Availability], you can then check the availability of the flange and auxiliary ports and compile your desired configuration using the short designations as a segment of the model code.

## Dimensions

**E4|XX** **PLUG-IN**

Dimensions
upon request

## Dimensions

| | | | |
|---|---|---|---|
| CMV60 | Nominal size 60 | CMV170 | Nominal size 170 |
| CMV85 | Nominal size 85 | CMV215 | Nominal size 215 |
| CMV115 | Nominal size 115 | ISO SAE | Mounting flange ISO 3019-1/ SAE J744 |
| CMV140 | Nominal size 140 | ISO METR | Mounting flange ISO 3019-2 metric |

| | | | |
|---|---|---|---|
| PLUG-IN | Mounting flange Plug-in, similar to ISO 3019-2 | | |
| | | | |
| | | | |
| | | | |

# Technical Specification | Drive Shafts / Comp. Flanges | DIN 5480 | **D4 / CMV 60/85**


OVERVIEW
- Key Facts

CONFIGURATION
- Modelcode & Availability

TECHNICAL SPECIFICATION
- General Technical Data
- Operating Parameters
- Controls
- Sensors
- Electric Interfaces
  - Connectors
- Mechanical Interfaces
  - Flanges
  - Shafts
- Hydraulical Interfaces
  - Work Ports
  - Auxiliary Ports
- Functions/Options

ISO 3019-1/ SAE J744
- S7 / CMV 60
- S8 / CMV 85
- S9 / CMV 85
- V6 / CMV 85/115
- V7 / CMV 140/170
- T1 / CMV 115/140/170
- T2 / CMV 170/215

DIN5480
- D3 / CMV 60
- D4 / CMV 60/85
- D5 / CMV 85/115
- D6 / CMV 115/140/170
- D7 / CMV 170/215

SAE J1946
- F4


In the following you will find the technical specifications of the drive shafts. They are clustered according to the related mounting flange and nominal size. First get an overview of the table data showing standard and load capacity of the shafts. Beyond that you will find the dimensions of each shaft in combination with each relevant mounting flange and nominal size. Note the short designations such as „S7“ or „D3“. In the section [Model Code & Availability], you can then check the availability of the flange and auxiliary ports and compile your desired configuration using the short designations as a segment of the model code.

## Dimensions

E4|XX ISO SAE

Dimensions upon request

## Dimensions

CMV60 ISO METR

Dimensions upon request

| | | | |
|---|---|---|---|
| CMV60 | Nominal size 60 | CMV170 | Nominal size 170 |
| CMV85 | Nominal size 85 | CMV215 | Nominal size 215 |
| CMV115 | Nominal size 115 | ISO SAE | Mounting flange ISO 3019-1/ SAE J744 |
| CMV140 | Nominal size 140 | ISO METR | Mounting flange ISO 3019-2 metric |

| | | | |
|---|---|---|---|
| PLUG-IN | Mounting flange Plug-in, similar to ISO 3019-2 | | |
| | | | |
| | | | |
| | | | |

# Technical Specification | Drive Shafts / Comp. Flanges | DIN 5480 | **D4 / CMV 60/85**


OVERVIEW
- Key Facts

CONFIGURATION
- Modelcode & Availability

TECHNICAL SPECIFICATION
- General Technical Data
- Operating Parameters
- Controls
- Sensors
- Electric Interfaces
  - Connectors
- Mechanical Interfaces
  - Flanges
  - Shafts
- Hydraulical Interfaces
  - Work Ports
  - Auxiliary Ports
- Functions/Options

ISO 3019-1/ SAE J744
- S7 / CMV 60
- S8 / CMV 85
- S9 / CMV 85
- V6 / CMV 85/115
- V7 / CMV 140/170
- T1 / CMV 115/140/170
- T2 / CMV 170/215

DIN5480
- D3 / CMV 60
- D4 / CMV 60/85
- D5 / CMV 85/115
- D6 / CMV 115/140/170
- D7 / CMV 170/215

SAE J1946
- F4


In the following you will find the technical specifications of the drive shafts. They are clustered according to the related mounting flange and nominal size. First get an overview of the table data showing standard and load capacity of the shafts. Beyond that you will find the dimensions of each shaft in combination with each relevant mounting flange and nominal size. Note the short designations such as „S7“ or „D3“. In the section [Model Code & Availability], you can then check the availability of the flange and auxiliary ports and compile your desired configuration using the short designations as a segment of the model code.

## Dimensions

**E4|XX** **PLUG-IN**

Dimensions
upon request

## Dimensions

| | | | |
|---|---|---|---|
| CMV60 | Nominal size 60 | CMV170 | Nominal size 170 |
| CMV85 | Nominal size 85 | CMV215 | Nominal size 215 |
| CMV115 | Nominal size 115 | ISO SAE | Mounting flange ISO 3019-1/ SAE J744 |
| CMV140 | Nominal size 140 | ISO METR | Mounting flange ISO 3019-2 metric |

| | | | |
|---|---|---|---|
| PLUG-IN | Mounting flange Plug-in, similar to ISO 3019-2 | | |
| | | | |
| | | | |
| | | | |

OVERVIEW
Key Facts
CONFIGURATION
Modelcode & Availability
TECHNICAL SPECIFICATION
General Technical Data
Operating Parameters
Controls
Sensors
Electric Interfaces
Connectors
Mechanical Interfaces
Flanges
Shafts
Hydraulical Interfaces
Work Ports
Auxiliary Ports
Functions/Options
ISO 3019-1/ SAE J744
S7 / CMV 60
S8 / CMV 85
S9 / CMV 85
V6 / CMV 85/115
V7 / CMV 140/170
T1 / CMV 115/140/170
T2 / CMV 170/215
DIN5480
D3 / CMV 60
D4 / CMV 60/85
D5 / CMV 85/115
D6 / CMV 115/140/170
D7 / CMV 170/215
SAE J1946
F4

# Technical Specification | Drive Shafts / Comp. Flanges | DIN 5480 | **D5 / CMV 85/115**

In the following you will find the technical specifications of the drive shafts. They are clustered according to the related mounting flange and nominal size. First get an overview of the table data showing standard and load capacity of the shafts. Beyond that you will find the dimensions of each shaft in combination with each relevant mounting flange and nominal size. Note the short designations such as „S7“ or „D3“. In the section [Model Code & Availability], you can then check the availability of the flange and auxiliary ports and compile your desired configuration using the short designations as a segment of the model code.

| Specification | | | | | | | | |
|---|---|---|---|---|---|---|---|---|
| Shaft end related data | Specification | Standard | | | | DIN 5480 | | |
| | | Number of teeth | | | | 18 | | |
| | | Spline pitch/module | | | | 2 | | |
| | | Identification code | | | | W40 | | |
| Nominal size related data | **Nominal size** | | | | | **85** | **115** | |
| | Torque | Maximum torque | | | Nm | 628 | 826 | |
| | Pressure | Maximum differential pressure | | dpmax | bar | 450 | 450 | |
| | Radial forces | 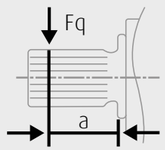 | | $F_{pmax}$ | N | 12500 | 16700 | |
| | | | | a | mm | 22.5 | 22.5 | |
| | Axial forces | 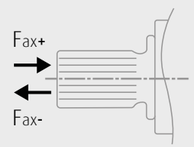 | Motor at standstill or in rotation considering unpressurized work ports | Fax+ | N | 0 | 0 | |
| | | | | Fax- | N | 710 | 1000 | |
| | | | Work ports pressurized | Fax+/p | N/bar | 9.6 | 11 | |

# Technical Specification | Drive Shafts / Comp. Flanges | DIN 5480 | **D5 / CMV 85/115**


OVERVIEW
- Key Facts

CONFIGURATION
- Modelcode & Availability

TECHNICAL SPECIFICATION
- General Technical Data
- Operating Parameters
- Controls
- Sensors
- Electric Interfaces
  - Connectors
- Mechanical Interfaces
  - Flanges
  - Shafts
- Hydraulical Interfaces
  - Work Ports
  - Auxiliary Ports
- Functions/Options

ISO 3019-1/ SAE J744
- S7 / CMV 60
- S8 / CMV 85
- S9 / CMV 85
- V6 / CMV 85/115
- V7 / CMV 140/170
- T1 / CMV 115/140/170
- T2 / CMV 170/215

DIN5480
- D3 / CMV 60
- D4 / CMV 60/85
- D5 / CMV 85/115
- D6 / CMV 115/140/170
- D7 / CMV 170/215

SAE J1946
- F4


In the following you will find the technical specifications of the drive shafts. They are clustered according to the related mounting flange and nominal size. First get an overview of the table data showing standard and load capacity of the shafts. Beyond that you will find the dimensions of each shaft in combination with each relevant mounting flange and nominal size. Note the short designations such as „S7“ or „D3“. In the section [Model Code & Availability], you can then check the availability of the flange and auxiliary ports and compile your desired configuration using the short designations as a segment of the model code.

## Dimensions

E4|XX ISO SAE

Dimensions
upon request

## Dimensions

CMV60 ISO METR

Dimensions
upon request

| | | | |
|---|---|---|---|
| CMV60 | Nominal size 60 | CMV170 | Nominal size 170 |
| CMV85 | Nominal size 85 | CMV215 | Nominal size 215 |
| CMV115 | Nominal size 115 | ISO SAE | Mounting flange ISO 3019-1/ SAE J744 |
| CMV140 | Nominal size 140 | ISO METR | Mounting flange ISO 3019-2 metric |

| | | | |
|---|---|---|---|
| PLUG-IN | Mounting flange Plug-in, similar to ISO 3019-2 | | |
| | | | |
| | | | |
| | | | |

# Technical Specification | Drive Shafts / Comp. Flanges | DIN 5480 | **D5 / CMV 85/115**


OVERVIEW
- Key Facts

CONFIGURATION
- Modelcode & Availability

TECHNICAL SPECIFICATION
- General Technical Data
- Operating Parameters
- Controls
- Sensors
- Electric Interfaces
  - Connectors
- Mechanical Interfaces
  - Flanges
  - Shafts
- Hydraulical Interfaces
  - Work Ports
  - Auxiliary Ports
- Functions/Options

ISO 3019-1/ SAE J744
- S7 / CMV 60
- S8 / CMV 85
- S9 / CMV 85
- V6 / CMV 85/115
- V7 / CMV 140/170
- T1 / CMV 115/140/170
- T2 / CMV 170/215

DIN5480
- D3 / CMV 60
- D4 / CMV 60/85
- D5 / CMV 85/115
- D6 / CMV 115/140/170
- D7 / CMV 170/215

SAE J1946
- F4


In the following you will find the technical specifications of the drive shafts. They are clustered according to the related mounting flange and nominal size. First get an overview of the table data showing standard and load capacity of the shafts. Beyond that you will find the dimensions of each shaft in combination with each relevant mounting flange and nominal size. Note the short designations such as „S7“ or „D3“. In the section [Model Code & Availability], you can then check the availability of the flange and auxiliary ports and compile your desired configuration using the short designations as a segment of the model code.

## Dimensions

**E4|XX** **PLUG-IN**

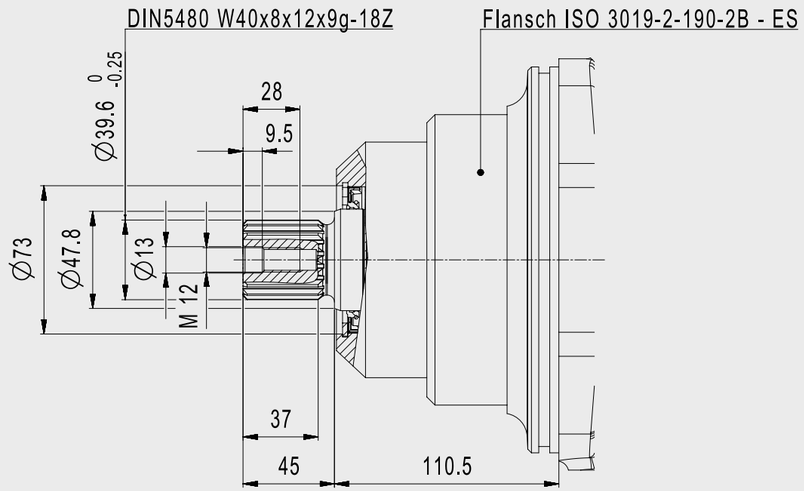


## Dimensions

| | | | |
|---|---|---|---|
| CMV60 | Nominal size 60 | CMV170 | Nominal size 170 |
| CMV85 | Nominal size 85 | CMV215 | Nominal size 215 |
| CMV115 | Nominal size 115 | ISO SAE | Mounting flange ISO 3019-1/ SAE J744 |
| CMV140 | Nominal size 140 | ISO METR | Mounting flange ISO 3019-2 metric |

| | | | |
|---|---|---|---|
| PLUG-IN | Mounting flange Plug-in, similar to ISO 3019-2 | | |
| | | | |
| | | | |
| | | | |

# Technical Specification | Drive Shafts / Comp. Flanges | DIN 5480 | **D5 / CMV 85/115**


OVERVIEW
- Key Facts

CONFIGURATION
- Modelcode & Availability

TECHNICAL SPECIFICATION
- General Technical Data
- Operating Parameters
- Controls
- Sensors
- Electric Interfaces
  - Connectors
- Mechanical Interfaces
  - Flanges
  - Shafts
- Hydraulical Interfaces
  - Work Ports
  - Auxiliary Ports
- Functions/Options

ISO 3019-1/ SAE J744
- S7 / CMV 60
- S8 / CMV 85
- S9 / CMV 85
- V6 / CMV 85/115
- V7 / CMV 140/170
- T1 / CMV 115/140/170
- T2 / CMV 170/215

DIN5480
- D3 / CMV 60
- D4 / CMV 60/85
- D5 / CMV 85/115
- D6 / CMV 115/140/170
- D7 / CMV 170/215

SAE J1946
- F4


In the following you will find the technical specifications of the drive shafts. They are clustered according to the related mounting flange and nominal size. First get an overview of the table data showing standard and load capacity of the shafts. Beyond that you will find the dimensions of each shaft in combination with each relevant mounting flange and nominal size. Note the short designations such as „S7“ or „D3“. In the section [Model Code & Availability], you can then check the availability of the flange and auxiliary ports and compile your desired configuration using the short designations as a segment of the model code.

## Dimensions

E4|XX ISO SAE

Dimensions
upon request

## Dimensions

CMV60 ISO METR

Dimensions
upon request

| | | | |
|---|---|---|---|
| CMV60 | Nominal size 60 | CMV170 | Nominal size 170 |
| CMV85 | Nominal size 85 | CMV215 | Nominal size 215 |
| CMV115 | Nominal size 115 | ISO SAE | Mounting flange ISO 3019-1/ SAE J744 |
| CMV140 | Nominal size 140 | ISO METR | Mounting flange ISO 3019-2 metric |

| | | | |
|---|---|---|---|
| PLUG-IN | Mounting flange Plug-in, similar to ISO 3019-2 | | |
| | | | |
| | | | |
| | | | |

OVERVIEW
Key Facts
CONFIGURATION
Modelcode & Availability
TECHNICAL SPECIFICATION
General Technical Data
Operating Parameters
Controls
Sensors
Electric Interfaces
Connectors
Mechanical Interfaces
Flanges
Shafts
Hydraulical Interfaces
Work Ports
Auxiliary Ports
Functions/Options
ISO 3019-1/ SAE J744
S7 / CMV 60
S8 / CMV 85
S9 / CMV 85
V6 / CMV 85/115
V7 / CMV 140/170
T1 / CMV 115/140/170
T2 / CMV 170/215
DIN5480
D3 / CMV 60
D4 / CMV 60/85
D5 / CMV 85/115
D6 / CMV 115/140/170
D7 / CMV 170/215
SAE J1946
F4

# Technical Specification | Drive Shafts / Comp. Flanges | DIN 5480 | **D5 / CMV 85/115**

In the following you will find the technical specifications of the drive shafts. They are clustered according to the related mounting flange and nominal size. First get an overview of the table data showing standard and load capacity of the shafts. Beyond that you will find the dimensions of each shaft in combination with each relevant mounting flange and nominal size. Note the short designations such as „S7“ or „D3“. In the section [Model Code & Availability], you can then check the availability of the flange and auxiliary ports and compile your desired configuration using the short designations as a segment of the model code.

## Dimensions

**E4|XX** **PLUG-IN**

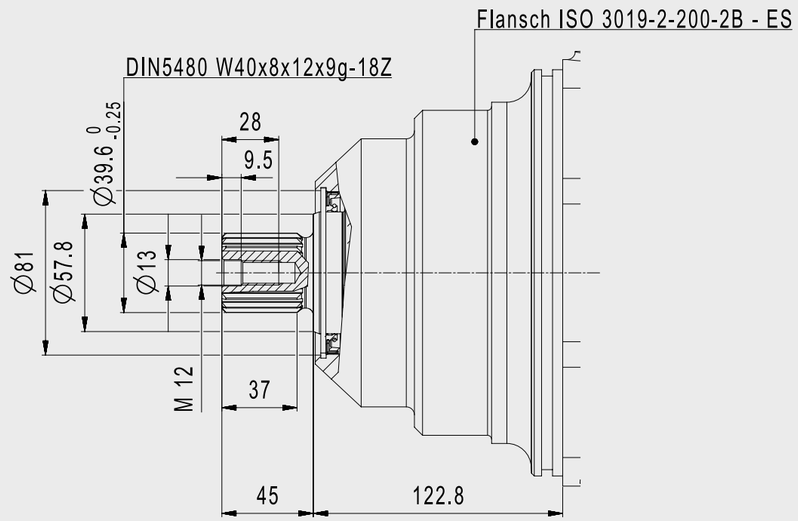


## Dimensions

| | | | |
|---|---|---|---|
| CMV60 | Nominal size 60 | CMV170 | Nominal size 170 |
| CMV85 | Nominal size 85 | CMV215 | Nominal size 215 |
| CMV115 | Nominal size 115 | ISO SAE | Mounting flange ISO 3019-1/ SAE J744 |
| CMV140 | Nominal size 140 | ISO METR | Mounting flange ISO 3019-2 metric |

| | | | |
|---|---|---|---|
| PLUG-IN | Mounting flange Plug-in, similar to ISO 3019-2 | | |
| | | | |
| | | | |
| | | | |

OVERVIEW
Key Facts
CONFIGURATION
Modelcode & Availability
TECHNICAL SPECIFICATION
General Technical Data
Operating Parameters
Controls
Sensors
Electric Interfaces
Connectors
Mechanical Interfaces
Flanges
Shafts
Hydraulical Interfaces
Work Ports
Auxiliary Ports
Functions/Options
ISO 3019-1/ SAE J744
S7 / CMV 60
S8 / CMV 85
S9 / CMV 85
V6 / CMV 85/115
V7 / CMV 140/170
T1 / CMV 115/140/170
T2 / CMV 170/215
DIN5480
D3 / CMV 60
D4 / CMV 60/85
D5 / CMV 85/115
D6 / CMV 115/140/170
D7 / CMV 170/215
SAE J1946
F4

# Technical Specification | Drive Shafts / Comp. Flanges | DIN 5480 | **D6 / CMV 115/140/170**

In the following you will find the technical specifications of the drive shafts. They are clustered according to the related mounting flange and nominal size. First get an overview of the table data showing standard and load capacity of the shafts. Beyond that you will find the dimensions of each shaft in combination with each relevant mounting flange and nominal size. Note the short designations such as „S7“ or „D3“. In the section [Model Code & Availability], you can then check the availability of the flange and auxiliary ports and compile your desired configuration using the short designations as a segment of the model code.

| Specification | | | | | | | | |
|---|---|---|---|---|---|---|---|---|
| Shaft end related data | Specification | Standard | | | | DIN 5480 | | |
| | | Number of teeth | | | | 21 | | |
| | | Spline pitch/module | | | | 2 | | |
| | | Identification code | | | | W45 | | |
| Nominal size related data | **Nominal size** | | | | | **115** | **140** | **170** |
| | Torque | Maximum torque | | | Nm | 826 | 1032 | 1218 |
| | Pressure | Maximum differential pressure | | dpmax | bar | 450 | 450 | 450 |
| | Radial forces | 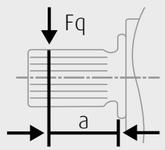 | | $F_{pmax}$ | N | 16700 | 19500 | 21200 |
| | | | | a | mm | 25 | 25 | 25 |
| | Axial forces | 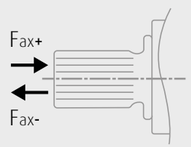 | Motor at standstill or in rotation considering unpressurized work ports | Fax+ | N | 0 | 0 | 0 |
| | | | | Fax- | N | 1000 | 1210 | 1200 |
| | | | Work ports pressurized | Fax+/p | N/bar | 11 | 12.4 | 15.1 |

# Technical Specification | Drive Shafts / Comp. Flanges | DIN 5480 | **D6 / CMV 115/140/170**


OVERVIEW
- Key Facts

CONFIGURATION
- Modelcode & Availability

TECHNICAL SPECIFICATION
- General Technical Data
- Operating Parameters
- Controls
- Sensors
- Electric Interfaces
  - Connectors
- Mechanical Interfaces
  - Flanges
  - Shafts
- Hydraulical Interfaces
  - Work Ports
  - Auxiliary Ports
- Functions/Options

ISO 3019-1/ SAE J744
- S7 / CMV 60
- S8 / CMV 85
- S9 / CMV 85
- V6 / CMV 85/115
- V7 / CMV 140/170
- T1 / CMV 115/140/170
- T2 / CMV 170/215

DIN5480
- D3 / CMV 60
- D4 / CMV 60/85
- D5 / CMV 85/115
- D6 / CMV 115/140/170
- D7 / CMV 170/215

SAE J1946
- F4


In the following you will find the technical specifications of the drive shafts. They are clustered according to the related mounting flange and nominal size. First get an overview of the table data showing standard and load capacity of the shafts. Beyond that you will find the dimensions of each shaft in combination with each relevant mounting flange and nominal size. Note the short designations such as „S7“ or „D3“. In the section [Model Code & Availability], you can then check the availability of the flange and auxiliary ports and compile your desired configuration using the short designations as a segment of the model code.

## Dimensions

**E4|XX** **ISO SAE**

Dimensions
upon request

## Dimensions

**CMV60** **ISO METR**

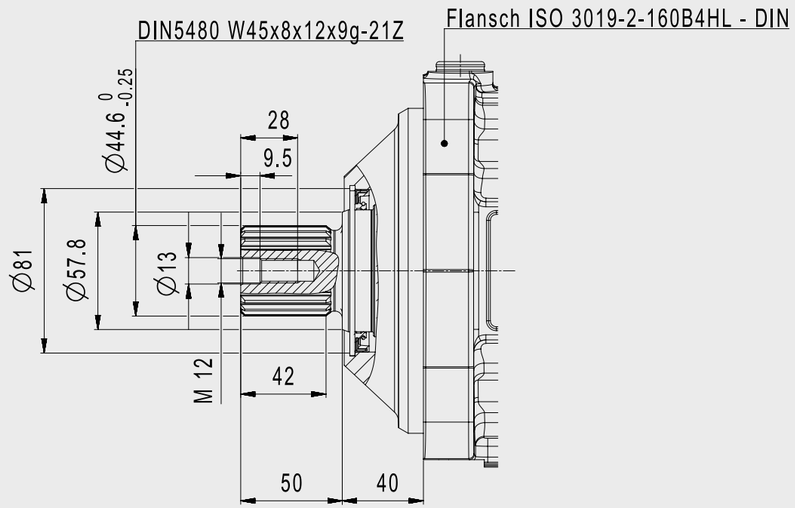


| | | | |
|---|---|---|---|
| CMV60 | Nominal size 60 | CMV170 | Nominal size 170 |
| CMV85 | Nominal size 85 | CMV215 | Nominal size 215 |
| CMV115 | Nominal size 115 | ISO SAE | Mounting flange ISO 3019-1/ SAE J744 |
| CMV140 | Nominal size 140 | ISO METR | Mounting flange ISO 3019-2 metric |

| | |
|---|---|
| PLUG-IN | Mounting flange Plug-in, similar to ISO 3019-2 |

# Technical Specification | Drive Shafts / Comp. Flanges | DIN 5480 | **D6 / CMV 115/140/170**


OVERVIEW
- Key Facts

CONFIGURATION
- Modelcode & Availability

TECHNICAL SPECIFICATION
- General Technical Data
- Operating Parameters
- Controls
- Sensors
- Electric Interfaces
  - Connectors
- Mechanical Interfaces
  - Flanges
  - Shafts
- Hydraulical Interfaces
  - Work Ports
  - Auxiliary Ports
- Functions/Options

ISO 3019-1/ SAE J744
- S7 / CMV 60
- S8 / CMV 85
- S9 / CMV 85
- V6 / CMV 85/115
- V7 / CMV 140/170
- T1 / CMV 115/140/170
- T2 / CMV 170/215

DIN5480
- D3 / CMV 60
- D4 / CMV 60/85
- D5 / CMV 85/115
- D6 / CMV 115/140/170
- D7 / CMV 170/215

SAE J1946
- F4


In the following you will find the technical specifications of the drive shafts. They are clustered according to the related mounting flange and nominal size. First get an overview of the table data showing standard and load capacity of the shafts. Beyond that you will find the dimensions of each shaft in combination with each relevant mounting flange and nominal size. Note the short designations such as „S7“ or „D3“. In the section [Model Code & Availability], you can then check the availability of the flange and auxiliary ports and compile your desired configuration using the short designations as a segment of the model code.

## Dimensions

**E4|XX** **PLUG-IN**

Dimensions upon request

## Dimensions

| | | | |
|---|---|---|---|
| CMV60 | Nominal size 60 | CMV170 | Nominal size 170 |
| CMV85 | Nominal size 85 | CMV215 | Nominal size 215 |
| CMV115 | Nominal size 115 | ISO SAE | Mounting flange ISO 3019-1/ SAE J744 |
| CMV140 | Nominal size 140 | ISO METR | Mounting flange ISO 3019-2 metric |

| | | | |
|---|---|---|---|
| PLUG-IN | Mounting flange Plug-in, similar to ISO 3019-2 | | |
| | | | |
| | | | |
| | | | |

# Technical Specification | Drive Shafts / Comp. Flanges | DIN 5480 | **D6 / CMV 115/140/170**

In the following you will find the technical specifications of the drive shafts. They are clustered according to the related mounting flange and nominal size. First get an overview of the table data showing standard and load capacity of the shafts. Beyond that you will find the dimensions of each shaft in combination with each relevant mounting flange and nominal size. Note the short designations such as „S7“ or „D3“. In the section [Model Code & Availability], you can then check the availability of the flange and auxiliary ports and compile your desired configuration using the short designations as a segment of the model code.

## Dimensions

E4|XX ISO SAE

Dimensions upon request

## Dimensions

CMV60 ISO METR

Dimensions upon request

| | | | |
|---|---|---|---|
| CMV60 | Nominal size 60 | CMV170 | Nominal size 170 |
| CMV85 | Nominal size 85 | CMV215 | Nominal size 215 |
| CMV115 | Nominal size 115 | ISO SAE | Mounting flange ISO 3019-1/ SAE J744 |
| CMV140 | Nominal size 140 | ISO METR | Mounting flange ISO 3019-2 metric |

| | | | |
|---|---|---|---|
| PLUG-IN | Mounting flange Plug-in, similar to ISO 3019-2 | | |
| | | | |
| | | | |
| | | | |

# Technical Specification | Drive Shafts / Comp. Flanges | DIN 5480 | **D6 / CMV 115/140/170**

In the following you will find the technical specifications of the drive shafts. They are clustered according to the related mounting flange and nominal size. First get an overview of the table data showing standard and load capacity of the shafts. Beyond that you will find the dimensions of each shaft in combination with each relevant mounting flange and nominal size. Note the short designations such as „S7“ or „D3“. In the section [Model Code & Availability], you can then check the availability of the flange and auxiliary ports and compile your desired configuration using the short designations as a segment of the model code.

## Dimensions

**E4|XX** **PLUG-IN**

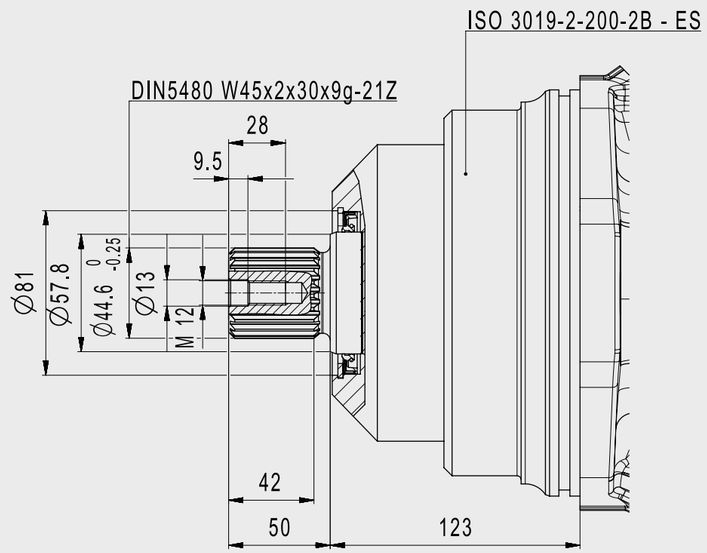


## Dimensions

| | | | |
|---|---|---|---|
| CMV60 | Nominal size 60 | CMV170 | Nominal size 170 |
| CMV85 | Nominal size 85 | CMV215 | Nominal size 215 |
| CMV115 | Nominal size 115 | ISO SAE | Mounting flange ISO 3019-1/ SAE J744 |
| CMV140 | Nominal size 140 | ISO METR | Mounting flange ISO 3019-2 metric |

| | | | |
|---|---|---|---|
| PLUG-IN | Mounting flange Plug-in, similar to ISO 3019-2 | | |
| | | | |
| | | | |
| | | | |

# Technical Specification | Drive Shafts / Comp. Flanges | DIN 5480 | **D6 / CMV 115/140/170**

In the following you will find the technical specifications of the drive shafts. They are clustered according to the related mounting flange and nominal size. First get an overview of the table data showing standard and load capacity of the shafts. Beyond that you will find the dimensions of each shaft in combination with each relevant mounting flange and nominal size. Note the short designations such as „S7“ or „D3“. In the section [Model Code & Availability], you can then check the availability of the flange and auxiliary ports and compile your desired configuration using the short designations as a segment of the model code.

## Dimensions

E4|XX ISO SAE

Dimensions upon request

## Dimensions

CMV60 ISO METR

Dimensions upon request

| | | | |
|---|---|---|---|
| CMV60 | Nominal size 60 | CMV170 | Nominal size 170 |
| CMV85 | Nominal size 85 | CMV215 | Nominal size 215 |
| CMV115 | Nominal size 115 | ISO SAE | Mounting flange ISO 3019-1/ SAE J744 |
| CMV140 | Nominal size 140 | ISO METR | Mounting flange ISO 3019-2 metric |

| | | | |
|---|---|---|---|
| PLUG-IN | Mounting flange Plug-in, similar to ISO 3019-2 | | |
| | | | |
| | | | |
| | | | |

# Technical Specification | Drive Shafts / Comp. Flanges | DIN 5480 | **D6 / CMV 115/140/170**


OVERVIEW
- Key Facts

CONFIGURATION
- Modelcode & Availability

TECHNICAL SPECIFICATION
- General Technical Data
- Operating Parameters
- Controls
- Sensors
- Electric Interfaces
  - Connectors
- Mechanical Interfaces
  - Flanges
  - Shafts
- Hydraulical Interfaces
  - Work Ports
  - Auxiliary Ports
- Functions/Options

ISO 3019-1/ SAE J744
- S7 / CMV 60
- S8 / CMV 85
- S9 / CMV 85
- V6 / CMV 85/115
- V7 / CMV 140/170
- T1 / CMV 115/140/170
- T2 / CMV 170/215

DIN5480
- D3 / CMV 60
- D4 / CMV 60/85
- D5 / CMV 85/115
- D6 / CMV 115/140/170
- D7 / CMV 170/215

SAE J1946
- F4


In the following you will find the technical specifications of the drive shafts. They are clustered according to the related mounting flange and nominal size. First get an overview of the table data showing standard and load capacity of the shafts. Beyond that you will find the dimensions of each shaft in combination with each relevant mounting flange and nominal size. Note the short designations such as „S7“ or „D3“. In the section [Model Code & Availability], you can then check the availability of the flange and auxiliary ports and compile your desired configuration using the short designations as a segment of the model code.

## Dimensions

**E4|XX** **PLUG-IN**

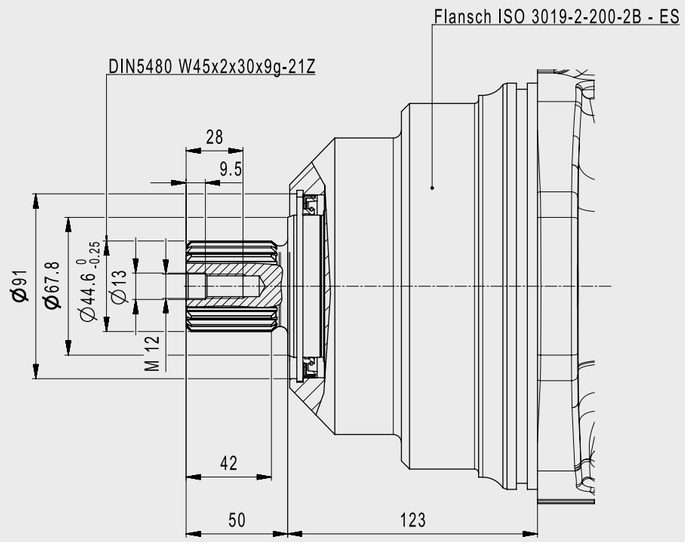


## Dimensions

| | | | |
|---|---|---|---|
| CMV60 | Nominal size 60 | CMV170 | Nominal size 170 |
| CMV85 | Nominal size 85 | CMV215 | Nominal size 215 |
| CMV115 | Nominal size 115 | ISO SAE | Mounting flange ISO 3019-1/ SAE J744 |
| CMV140 | Nominal size 140 | ISO METR | Mounting flange ISO 3019-2 metric |

| | | | |
|---|---|---|---|
| PLUG-IN | Mounting flange Plug-in, similar to ISO 3019-2 | | |
| | | | |
| | | | |
| | | | |

OVERVIEW
Key Facts
CONFIGURATION
Modelcode & Availability
TECHNICAL SPECIFICATION
General Technical Data
Operating Parameters
Controls
Sensors
Electric Interfaces
Connectors
Mechanical Interfaces
Flanges
Shafts
Hydraulical Interfaces
Work Ports
Auxiliary Ports
Functions/Options
ISO 3019-1/ SAE J744
S7 / CMV 60
S8 / CMV 85
S9 / CMV 85
V6 / CMV 85/115
V7 / CMV 140/170
T1 / CMV 115/140/170
T2 / CMV 170/215
DIN5480
D3 / CMV 60
D4 / CMV 60/85
D5 / CMV 85/115
D6 / CMV 115/140/170
D7 / CMV 170/215
SAE J1946
F4

# Technical Specification | Drive Shafts / Comp. Flanges | DIN 5480 | **D7 / CMV 170/215**

In the following you will find the technical specifications of the drive shafts. They are clustered according to the related mounting flange and nominal size. First get an overview of the table data showing standard and load capacity of the shafts. Beyond that you will find the dimensions of each shaft in combination with each relevant mounting flange and nominal size. Note the short designations such as „S7“ or „D3“. In the section [Model Code & Availability], you can then check the availability of the flange and auxiliary ports and compile your desired configuration using the short designations as a segment of the model code.

| Specification | | | | | | | | |
|---|---|---|---|---|---|---|---|---|
| Shaft end related data | Specification | Standard | | | | DIN 5480 | | |
| | | Number of teeth | | | | 24 | | |
| | | Spline pitch/module | | | | 2 | | |
| | | Identification code | | | | W50 | | |
| Nominal size related data | **Nominal size** | | | | | **170** | **215** | |
| | Torque | Maximum torque | | | Nm | 1218 | 1561 | |
| | Pressure | Maximum differential pressure | | dpmax | bar | 450 | 450 | |
| | Radial forces | 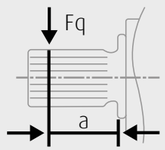 | | $F_{pmax}$ | N | 21200 | 25000 | |
| | | | | a | mm | 27.5 | 27.5 | |
| | Axial forces | 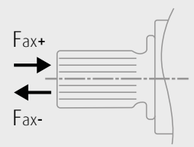 | Motor at standstill or in rotation considering unpressurized work ports | Fax+ | N | 0 | 0 | |
| | | | | Fax- | N | 1200 | 1250 | |
| | | | Work ports pressurized | Fax+/p | N/bar | 15.1 | 17 | |

# Technical Specification | Drive Shafts / Comp. Flanges | DIN 5480 | **D7 / CMV 170/215**


OVERVIEW
- Key Facts

CONFIGURATION
- Modelcode & Availability

TECHNICAL SPECIFICATION
- General Technical Data
- Operating Parameters
- Controls
- Sensors
- Electric Interfaces
  - Connectors
- Mechanical Interfaces
  - Flanges
  - Shafts
- Hydraulical Interfaces
  - Work Ports
  - Auxiliary Ports
- Functions/Options

ISO 3019-1/ SAE J744
- S7 / CMV 60
- S8 / CMV 85
- S9 / CMV 85
- V6 / CMV 85/115
- V7 / CMV 140/170
- T1 / CMV 115/140/170
- T2 / CMV 170/215

DIN5480
- D3 / CMV 60
- D4 / CMV 60/85
- D5 / CMV 85/115
- D6 / CMV 115/140/170
- D7 / CMV 170/215

SAE J1946
- F4


In the following you will find the technical specifications of the drive shafts. They are clustered according to the related mounting flange and nominal size. First get an overview of the table data showing standard and load capacity of the shafts. Beyond that you will find the dimensions of each shaft in combination with each relevant mounting flange and nominal size. Note the short designations such as „S7“ or „D3“. In the section [Model Code & Availability], you can then check the availability of the flange and auxiliary ports and compile your desired configuration using the short designations as a segment of the model code.

## Dimensions

**E4|XX** **ISO SAE**

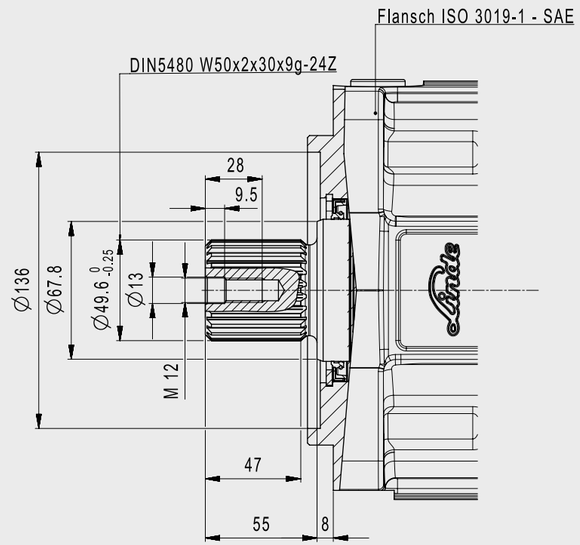


## Dimensions

**CMV60** **ISO METR**

Dimensions upon request

| | | | |
|---|---|---|---|
| CMV60 | Nominal size 60 | CMV170 | Nominal size 170 |
| CMV85 | Nominal size 85 | CMV215 | Nominal size 215 |
| CMV115 | Nominal size 115 | ISO SAE | Mounting flange ISO 3019-1/ SAE J744 |
| CMV140 | Nominal size 140 | ISO METR | Mounting flange ISO 3019-2 metric |

| | | | |
|---|---|---|---|
| PLUG-IN | Mounting flange Plug-in, similar to ISO 3019-2 | | |
| | | | |
| | | | |
| | | | |

# Technical Specification | Drive Shafts / Comp. Flanges | DIN 5480 | **D7 / CMV 170/215**


OVERVIEW
- Key Facts

CONFIGURATION
- Modelcode & Availability

TECHNICAL SPECIFICATION
- General Technical Data
- Operating Parameters
- Controls
- Sensors
- Electric Interfaces
  - Connectors
- Mechanical Interfaces
  - Flanges
  - Shafts
- Hydraulical Interfaces
  - Work Ports
  - Auxiliary Ports
- Functions/Options

ISO 3019-1/ SAE J744
- S7 / CMV 60
- S8 / CMV 85
- S9 / CMV 85
- V6 / CMV 85/115
- V7 / CMV 140/170
- T1 / CMV 115/140/170
- T2 / CMV 170/215

DIN5480
- D3 / CMV 60
- D4 / CMV 60/85
- D5 / CMV 85/115
- D6 / CMV 115/140/170
- D7 / CMV 170/215

SAE J1946
- F4


In the following you will find the technical specifications of the drive shafts. They are clustered according to the related mounting flange and nominal size. First get an overview of the table data showing standard and load capacity of the shafts. Beyond that you will find the dimensions of each shaft in combination with each relevant mounting flange and nominal size. Note the short designations such as „S7“ or „D3“. In the section [Model Code & Availability], you can then check the availability of the flange and auxiliary ports and compile your desired configuration using the short designations as a segment of the model code.

## Dimensions

**E4|XX** **PLUG-IN**

Dimensions
upon request

## Dimensions

| | | | |
|---|---|---|---|
| CMV60 | Nominal size 60 | CMV170 | Nominal size 170 |
| CMV85 | Nominal size 85 | CMV215 | Nominal size 215 |
| CMV115 | Nominal size 115 | ISO SAE | Mounting flange ISO 3019-1/ SAE J744 |
| CMV140 | Nominal size 140 | ISO METR | Mounting flange ISO 3019-2 metric |

| | | | |
|---|---|---|---|
| PLUG-IN | Mounting flange Plug-in, similar to ISO 3019-2 | | |
| | | | |
| | | | |
| | | | |

# Technical Specification | Drive Shafts / Comp. Flanges | DIN 5480 | **D7 / CMV 170/215**


OVERVIEW
- Key Facts

CONFIGURATION
- Modelcode & Availability

TECHNICAL SPECIFICATION
- General Technical Data
- Operating Parameters
- Controls
- Sensors
- Electric Interfaces
  - Connectors
- Mechanical Interfaces
  - Flanges
  - Shafts
- Hydraulical Interfaces
  - Work Ports
  - Auxiliary Ports
- Functions/Options

ISO 3019-1/ SAE J744
- S7 / CMV 60
- S8 / CMV 85
- S9 / CMV 85
- V6 / CMV 85/115
- V7 / CMV 140/170
- T1 / CMV 115/140/170
- T2 / CMV 170/215

DIN5480
- D3 / CMV 60
- D4 / CMV 60/85
- D5 / CMV 85/115
- D6 / CMV 115/140/170
- D7 / CMV 170/215

SAE J1946
- F4


In the following you will find the technical specifications of the drive shafts. They are clustered according to the related mounting flange and nominal size. First get an overview of the table data showing standard and load capacity of the shafts. Beyond that you will find the dimensions of each shaft in combination with each relevant mounting flange and nominal size. Note the short designations such as „S7“ or „D3“. In the section [Model Code & Availability], you can then check the availability of the flange and auxiliary ports and compile your desired configuration using the short designations as a segment of the model code.

## Dimensions

**E4|XX** **ISO SAE**

Dimensions
upon request

## Dimensions

**CMV60** **ISO METR**

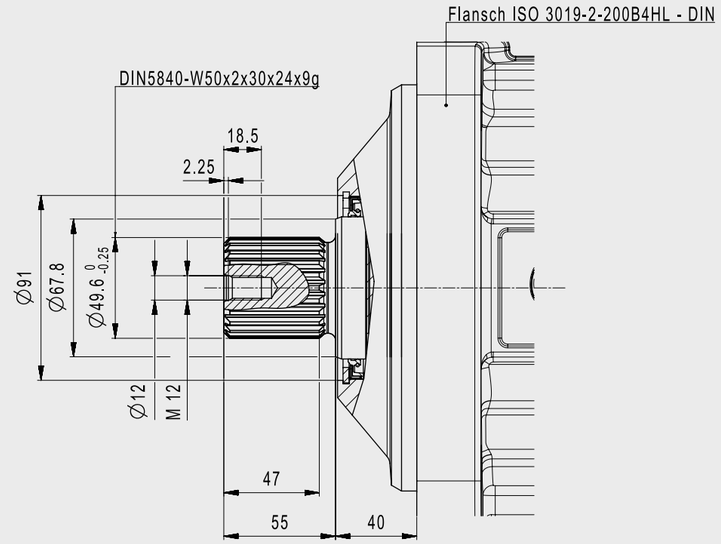


| | | | |
|---|---|---|---|
| CMV60 | Nominal size 60 | CMV170 | Nominal size 170 |
| CMV85 | Nominal size 85 | CMV215 | Nominal size 215 |
| CMV115 | Nominal size 115 | ISO SAE | Mounting flange ISO 3019-1/ SAE J744 |
| CMV140 | Nominal size 140 | ISO METR | Mounting flange ISO 3019-2 metric |

| | | | |
|---|---|---|---|
| PLUG-IN | Mounting flange Plug-in, similar to ISO 3019-2 | | |
| | | | |
| | | | |
| | | | |

# Technical Specification | Drive Shafts / Comp. Flanges | DIN 5480 | **D7 / CMV 170/215**


OVERVIEW
- Key Facts

CONFIGURATION
- Modelcode & Availability

TECHNICAL SPECIFICATION
- General Technical Data
- Operating Parameters
- Controls
- Sensors
- Electric Interfaces
  - Connectors
- Mechanical Interfaces
  - Flanges
  - Shafts
- Hydraulical Interfaces
  - Work Ports
  - Auxiliary Ports
- Functions/Options

ISO 3019-1/ SAE J744
- S7 / CMV 60
- S8 / CMV 85
- S9 / CMV 85
- V6 / CMV 85/115
- V7 / CMV 140/170
- T1 / CMV 115/140/170
- T2 / CMV 170/215

DIN5480
- D3 / CMV 60
- D4 / CMV 60/85
- D5 / CMV 85/115
- D6 / CMV 115/140/170
- D7 / CMV 170/215

SAE J1946
- F4


In the following you will find the technical specifications of the drive shafts. They are clustered according to the related mounting flange and nominal size. First get an overview of the table data showing standard and load capacity of the shafts. Beyond that you will find the dimensions of each shaft in combination with each relevant mounting flange and nominal size. Note the short designations such as „S7“ or „D3“. In the section [Model Code & Availability], you can then check the availability of the flange and auxiliary ports and compile your desired configuration using the short designations as a segment of the model code.

## Dimensions

**E4|XX** **PLUG-IN**

Dimensions
upon request

## Dimensions

| | | | |
|---|---|---|---|
| CMV60 | Nominal size 60 | CMV170 | Nominal size 170 |
| CMV85 | Nominal size 85 | CMV215 | Nominal size 215 |
| CMV115 | Nominal size 115 | ISO SAE | Mounting flange ISO 3019-1/ SAE J744 |
| CMV140 | Nominal size 140 | ISO METR | Mounting flange ISO 3019-2 metric |

| | | | |
|---|---|---|---|
| PLUG-IN | Mounting flange Plug-in, similar to ISO 3019-2 | | |
| | | | |
| | | | |
| | | | |

# Technical Specification | Drive Shafts / Comp. Flanges | SAE J1946 | **F4**


OVERVIEW
- Key Facts

CONFIGURATION
- Modelcode & Availability

TECHNICAL SPECIFICATION
- General Technical Data
- Operating Parameters
- Controls
- Sensors

Electric Interfaces
- Connectors

Mechanical Interfaces
- Flanges
- Shafts

Hydraulical Interfaces
- Work Ports
- Auxiliary Ports

Functions/Options

ISO 3019-1/ SAE J744
- S7 / CMV 60
- S8 / CMV 85
- S9 / CMV 85
- V6 / CMV 85/115
- V7 / CMV 140/170
- T1 / CMV 115/140/170
- T2 / CMV 170/215

DIN5480
- D3 / CMV 60
- D4 / CMV 60/85
- D5 / CMV 85/115
- D6 / CMV 115/140/170
- D7 / CMV 170/215

SAE J1946
- F4


In the following you will find the technical specifications of the drive shafts. They are clustered according to the related mounting flange and nominal size. First get an overview of the table data showing standard and load capacity of the shafts. Beyond that you will find the dimensions of each shaft in combination with each relevant mounting flange and nominal size. Note the short designations such as „S7“ or „D3“. In the section [Model Code & Availability], you can then check the availability of the flange and auxiliary ports and compile your desired configuration using the short designations as a segment of the model code.

| Specification | | | | | | |
|---|---|---|---|---|---|---|
| Shaft end related data | Specification | Standard | | | | SAE J1946 |
| | | Number of teeth | | | | |
| | | Spline pitch/module | | | | |
| | | Identification code | | | | |
| Nominal size related data | **Nominal size** | | | | | **85/115/140/170/215** |
| | Torque | Maximum torque | | | Nm | upon request |
| | Pressure | Maximum differential pressure | | dpmax | bar | upon request |
| | Radial forces | 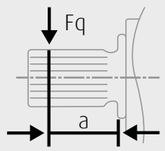  | | $F_{pmax}$ | N | upon request |
| | | | | a | mm | upon request |
| | Axial forces | 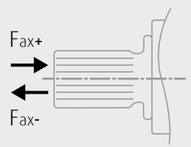  | Motor at standstill or in rotation considering unpressurized work ports | Fax+ | N | upon request |
| | | | | Fax- | N | upon request |
| | | | Work ports pressurized | Fax+/p | N/bar | upon request |

# Technical Specification | Drive Shafts / Comp. Flanges | SAE J1946 | **F4**


OVERVIEW
- Key Facts

CONFIGURATION
- Modelcode & Availability

TECHNICAL SPECIFICATION
- General Technical Data
- Operating Parameters
- Controls
- Sensors
- Electric Interfaces
  - Connectors
- Mechanical Interfaces
  - Flanges
  - Shafts
- Hydraulical Interfaces
  - Work Ports
  - Auxiliary Ports
- Functions/Options

ISO 3019-1/ SAE J744
- S7 / CMV 60
- S8 / CMV 85
- S9 / CMV 85
- V6 / CMV 85/115
- V7 / CMV 140/170
- T1 / CMV 115/140/170
- T2 / CMV 170/215

DIN5480
- D3 / CMV 60
- D4 / CMV 60/85
- D5 / CMV 85/115
- D6 / CMV 115/140/170
- D7 / CMV 170/215

SAE J1946
- F4


In the following you will find the technical specifications of the drive shafts. They are clustered according to the related mounting flange and nominal size. First get an overview of the table data showing standard and load capacity of the shafts. Beyond that you will find the dimensions of each shaft in combination with each relevant mounting flange and nominal size. Note the short designations such as „S7“ or „D3“. In the section [Model Code & Availability], you can then check the availability of the flange and auxiliary ports and compile your desired configuration using the short designations as a segment of the model code.

## Dimensions

Dimensions
upon request

## Dimensions

Dimensions
upon request

| | | | |
|---|---|---|---|
| CMV60 | Nominal size 60 | CMV170 | Nominal size 170 |
| CMV85 | Nominal size 85 | CMV215 | Nominal size 215 |
| CMV115 | Nominal size 115 | ISO SAE | Mounting flange ISO 3019-1/ SAE J744 |
| CMV140 | Nominal size 140 | ISO METR | Mounting flange ISO 3019-2 metric |

| | | | |
|---|---|---|---|
| PLUG-IN | Mounting flange Plug-in, similar to ISO 3019-2 | | |
| | | | |
| | | | |
| | | | |

# Technical Specification | Work Ports | Axial Twin Ports | ISO SAE | **CMV 60**


OVERVIEW
- Key Facts

CONFIGURATION
- Modelcode & Availability

TECHNICAL SPECIFICATION
- General Technical Data
- Operating Parameters
- Controls
- Sensors
- Electric Interfaces
  - Connectors
- Mechanical Interfaces
  - Flanges
  - Shafts
- Hydraulical Interfaces
  - Work Ports
  - Auxiliary Ports
- Functions/Options

AXIAL TWIN PORTS ISO 6162-2
- In combination with ISO 3019-1 / SAE J744 — CMV 60-215
- In combination with ISO 3019-2 metric — CMV 60-215
- In combination with PLUG-IN, SIM. TO ISO 3019-2 — CMV 60-215

SIDE PORTS ISO 6162-2
- In combination with ISO 3019-1 / SAE J744 — CMV 60-215
- In combination with ISO 3019-2 metric — CMV 60-215
- In combination with PLUG-IN, SIM. TO ISO 3019-2 — CMV 60-215

RADIAL TWIN PORTS ISO 6162-2
- In combination with ISO 3019-1 / SAE J744 — CMV 60-215
- In combination with ISO 3019-2 metric — CMV 60-215
- In combination with PLUG-IN, SIM. TO ISO 3019-2 — CMV 60-215


In the following you will find the technical specifications of the work ports. They are clustered according to the related mounting flange and nominal size. In the section [Model Code & Availability], you can then check the availability of the work ports in combination with additional functions integrated in the port plate housing. So please have a look at model-code [item 10. Port Plate housing] and compile your desired configuration.

## Dimensions - Side view

Dimensions upon request

Dimensions upon request

## Dimensions - Back view

Dimensions upon request

Dimensions upon request

# Technical Specification | Work Ports | Axial Twin Ports | ISO SAE | **CMV 85**


OVERVIEW
- Key Facts

CONFIGURATION
- Modelcode & Availability

TECHNICAL SPECIFICATION
- General Technical Data
- Operating Parameters
- Controls
- Sensors
- Electric Interfaces
  - Connectors
- Mechanical Interfaces
  - Flanges
  - Shafts
- Hydraulical Interfaces
  - Work Ports
  - Auxiliary Ports
- Functions/Options

AXIAL TWIN PORTS ISO 6162-2
- In combination with ISO 3019-1 / SAE J744 — CMV 60-215
- In combination with ISO 3019-2 metric — CMV 60-215
- In combination with PLUG-IN, SIM. TO ISO 3019-2 — CMV 60-215

SIDE PORTS ISO 6162-2
- In combination with ISO 3019-1 / SAE J744 — CMV 60-215
- In combination with ISO 3019-2 metric — CMV 60-215
- In combination with PLUG-IN, SIM. TO ISO 3019-2 — CMV 60-215

RADIAL TWIN PORTS ISO 6162-2
- In combination with ISO 3019-1 / SAE J744 — CMV 60-215
- In combination with ISO 3019-2 metric — CMV 60-215
- In combination with PLUG-IN, SIM. TO ISO 3019-2 — CMV 60-215


In the following you will find the technical specifications of the work ports. They are clustered according to the related mounting flange and nominal size. In the section [Model Code & Availability], you can then check the availability of the work ports in combination with additional functions integrated in the port plate housing. So please have a look at model-code [item 10. Port Plate housing] and compile your desired configuration.

## Dimensions - Side view

Dimensions upon request

Dimensions upon request

## Dimensions - Back view

Dimensions upon request

Dimensions upon request

# Technical Specification | Work Ports | Axial Twin Ports | ISO SAE | **CMV 115**


OVERVIEW
- Key Facts

CONFIGURATION
- Modelcode & Availability

TECHNICAL SPECIFICATION
- General Technical Data
- Operating Parameters
- Controls
- Sensors
- Electric Interfaces
  - Connectors
- Mechanical Interfaces
  - Flanges
  - Shafts
- Hydraulical Interfaces
  - Work Ports
  - Auxiliary Ports
- Functions/Options

AXIAL TWIN PORTS ISO 6162-2
- In combination with ISO 3019-1 / SAE J744 — CMV 60-215
- In combination with ISO 3019-2 metric — CMV 60-215
- In combination with PLUG-IN, SIM. TO ISO 3019-2 — CMV 60-215

SIDE PORTS ISO 6162-2
- In combination with ISO 3019-1 / SAE J744 — CMV 60-215
- In combination with ISO 3019-2 metric — CMV 60-215
- In combination with PLUG-IN, SIM. TO ISO 3019-2 — CMV 60-215

RADIAL TWIN PORTS ISO 6162-2
- In combination with ISO 3019-1 / SAE J744 — CMV 60-215
- In combination with ISO 3019-2 metric — CMV 60-215
- In combination with PLUG-IN, SIM. TO ISO 3019-2 — CMV 60-215


In the following you will find the technical specifications of the work ports. They are clustered according to the related mounting flange and nominal size. In the section [Model Code & Availability], you can then check the availability of the work ports in combination with additional functions integrated in the port plate housing. So please have a look at model-code [item 10. Port Plate housing] and compile your desired configuration.

## Dimensions - Side view

Dimensions upon request

Dimensions upon request

## Dimensions - Back view

Dimensions upon request

Dimensions upon request

# Technical Specification | Work Ports | Axial Twin Ports | ISO SAE | **CMV 140**


OVERVIEW
- Key Facts

CONFIGURATION
- Modelcode & Availability

TECHNICAL SPECIFICATION
- General Technical Data
- Operating Parameters
- Controls
- Sensors
- Electric Interfaces
  - Connectors
- Mechanical Interfaces
  - Flanges
  - Shafts
- Hydraulical Interfaces
  - Work Ports
  - Auxiliary Ports
- Functions/Options

AXIAL TWIN PORTS ISO 6162-2
- In combination with ISO 3019-1 / SAE J744 — CMV 60-215
- In combination with ISO 3019-2 metric — CMV 60-215
- In combination with PLUG-IN, SIM. TO ISO 3019-2 — CMV 60-215

SIDE PORTS ISO 6162-2
- In combination with ISO 3019-1 / SAE J744 — CMV 60-215
- In combination with ISO 3019-2 metric — CMV 60-215
- In combination with PLUG-IN, SIM. TO ISO 3019-2 — CMV 60-215

RADIAL TWIN PORTS ISO 6162-2
- In combination with ISO 3019-1 / SAE J744 — CMV 60-215
- In combination with ISO 3019-2 metric — CMV 60-215
- In combination with PLUG-IN, SIM. TO ISO 3019-2 — CMV 60-215


In the following you will find the technical specifications of the work ports. They are clustered according to the related mounting flange and nominal size. In the section [Model Code & Availability], you can then check the availability of the work ports in combination with additional functions integrated in the port plate housing. So please have a look at model-code [item 10. Port Plate housing] and compile your desired configuration.

## Dimensions - Side view

Dimensions upon request

Dimensions upon request

## Dimensions - Back view

Dimensions upon request

Dimensions upon request

# Technical Specification | Work Ports | Axial Twin Ports | ISO SAE | **CMV 170**


OVERVIEW
- Key Facts

CONFIGURATION
- Modelcode & Availability

TECHNICAL SPECIFICATION
- General Technical Data
- Operating Parameters
- Controls
- Sensors
- Electric Interfaces
  - Connectors
- Mechanical Interfaces
  - Flanges
  - Shafts
- Hydraulical Interfaces
  - Work Ports
  - Auxiliary Ports
- Functions/Options

AXIAL TWIN PORTS ISO 6162-2
- In combination with ISO 3019-1 / SAE J744 — CMV 60-215
- In combination with ISO 3019-2 metric — CMV 60-215
- In combination with PLUG-IN, SIM. TO ISO 3019-2 — CMV 60-215

SIDE PORTS ISO 6162-2
- In combination with ISO 3019-1 / SAE J744 — CMV 60-215
- In combination with ISO 3019-2 metric — CMV 60-215
- In combination with PLUG-IN, SIM. TO ISO 3019-2 — CMV 60-215

RADIAL TWIN PORTS ISO 6162-2
- In combination with ISO 3019-1 / SAE J744 — CMV 60-215
- In combination with ISO 3019-2 metric — CMV 60-215
- In combination with PLUG-IN, SIM. TO ISO 3019-2 — CMV 60-215


In the following you will find the technical specifications of the work ports. They are clustered according to the related mounting flange and nominal size. In the section [Model Code & Availability], you can then check the availability of the work ports in combination with additional functions integrated in the port plate housing. So please have a look at model-code [item 10. Port Plate housing] and compile your desired configuration.

## Dimensions - Side view

Dimensions upon request

Dimensions upon request

## Dimensions - Back view

Dimensions upon request

Dimensions upon request

# Technical Specification | Work Ports | Axial Twin Ports | ISO SAE | **CMV 215**


OVERVIEW
- Key Facts

CONFIGURATION
- Modelcode & Availability

TECHNICAL SPECIFICATION
- General Technical Data
- Operating Parameters
- Controls
- Sensors
- Electric Interfaces
  - Connectors
- Mechanical Interfaces
  - Flanges
  - Shafts
- Hydraulical Interfaces
  - Work Ports
  - Auxiliary Ports
- Functions/Options

AXIAL TWIN PORTS ISO 6162-2
- In combination with ISO 3019-1 / SAE J744 — CMV 60-215
- In combination with ISO 3019-2 metric — CMV 60-215
- In combination with PLUG-IN, SIM. TO ISO 3019-2 — CMV 60-215

SIDE PORTS ISO 6162-2
- In combination with ISO 3019-1 / SAE J744 — CMV 60-215
- In combination with ISO 3019-2 metric — CMV 60-215
- In combination with PLUG-IN, SIM. TO ISO 3019-2 — CMV 60-215

RADIAL TWIN PORTS ISO 6162-2
- In combination with ISO 3019-1 / SAE J744 — CMV 60-215
- In combination with ISO 3019-2 metric — CMV 60-215
- In combination with PLUG-IN, SIM. TO ISO 3019-2 — CMV 60-215


In the following you will find the technical specifications of the work ports. They are clustered according to the related mounting flange and nominal size. In the section [Model Code & Availability], you can then check the availability of the work ports in combination with additional functions integrated in the port plate housing. So please have a look at model-code [item 10. Port Plate housing] and compile your desired configuration.

## Dimensions - Side view

Dimensions upon request

Dimensions upon request

## Dimensions - Back view

Dimensions upon request

Dimensions upon request

# Technical Specification | Work Ports | Axial Twin Ports | ISO METR | **CMV 60**


OVERVIEW
- Key Facts

CONFIGURATION
- Modelcode & Availability

TECHNICAL SPECIFICATION
- General Technical Data
- Operating Parameters
- Controls
- Sensors
- Electric Interfaces
  - Connectors
- Mechanical Interfaces
  - Flanges
  - Shafts
- Hydraulical Interfaces
  - Work Ports
  - Auxiliary Ports
- Functions/Options

AXIAL TWIN PORTS ISO 6162-2
- In combination with ISO 3019-1 / SAE J744 — CMV 60-215
- In combination with ISO 3019-2 metric — CMV 60-215
- In combination with PLUG-IN, SIM. TO ISO 3019-2 — CMV 60-215

SIDE PORTS ISO 6162-2
- In combination with ISO 3019-1 / SAE J744 — CMV 60-215
- In combination with ISO 3019-2 metric — CMV 60-215
- In combination with PLUG-IN, SIM. TO ISO 3019-2 — CMV 60-215

RADIAL TWIN PORTS ISO 6162-2
- In combination with ISO 3019-1 / SAE J744 — CMV 60-215
- In combination with ISO 3019-2 metric — CMV 60-215
- In combination with PLUG-IN, SIM. TO ISO 3019-2 — CMV 60-215


In the following you will find the technical specifications of the work ports. They are clustered according to the related mounting flange and nominal size. In the section [Model Code & Availability], you can then check the availability of the work ports in combination with additional functions integrated in the port plate housing. So please have a look at model-code [item 10. Port Plate housing] and compile your desired configuration.

## Dimensions - Side view

**E4|XX**

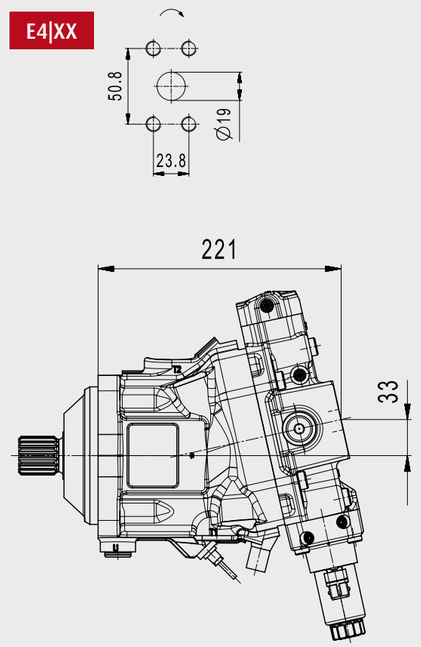


**E6|XX**

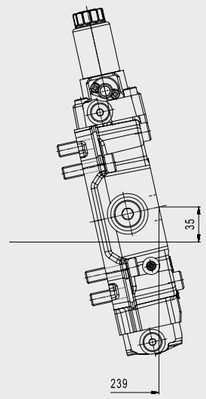


## Dimensions - Back view

**E4|XX**

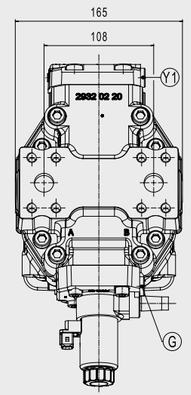


**E6|XX**

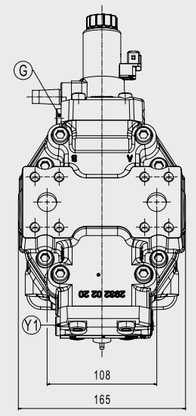


| | |
|---|---|
| E4\|XX | Configuration with negative control (E4 displacement control). The other options shown do not determine the position of the w. ports and are chosen as an example. |
| E6\|XX | Configuration with positive control (E6 displacement control). The other options shown do not determine the position of the w. ports and are chosen as an example. |

| | |
|---|---|
| A | High pressure work port, ISO 6162-2,<br>If pressurised - motor runs clockwise<br>Nom. pres.: 450 bar, max. press.: 500 bar |
| B | High pressure work port, ISO 6162-2,<br>If pressurised - motor runs counter-clockwise<br>Nom. pres.: 450 bar, max. press.: 500 bar |

| | |
|---|---|
| AX | Pressure equalization port |
| BX | |
| T1 | Drain / vent port, ISO 6149 |
| T2 | Drain / vent port, ISO 6149 |

| | |
|---|---|
| G | Ext. control pressure supply, ISO 6149 |
| U | Bearing flush port, ISO 6149 |
| Y1 | Measuring port, ISO 6149 |
| | |

OVERVIEW
- Key Facts

CONFIGURATION
- Modelcode & Availability

TECHNICAL SPECIFICATION
- General Technical Data
- Operating Parameters
- Controls
- Sensors
- Electric Interfaces
  - Connectors
- Mechanical Interfaces
  - Flanges
  - Shafts
- Hydraulical Interfaces
  - Work Ports
  - Auxiliary Ports
- Functions/Options

AXIAL TWIN PORTS ISO 6162-2
- In combination with ISO 3019-1 / SAE J744 — CMV 60-215
- In combination with ISO 3019-2 metric — CMV 60-215
- In combination with PLUG-IN, SIM. TO ISO 3019-2 — CMV 60-215

SIDE PORTS ISO 6162-2
- In combination with ISO 3019-1 / SAE J744 — CMV 60-215
- In combination with ISO 3019-2 metric — CMV 60-215
- In combination with PLUG-IN, SIM. TO ISO 3019-2 — CMV 60-215

RADIAL TWIN PORTS ISO 6162-2
- In combination with ISO 3019-1 / SAE J744 — CMV 60-215
- In combination with ISO 3019-2 metric — CMV 60-215
- In combination with PLUG-IN, SIM. TO ISO 3019-2 — CMV 60-215


# Technical Specification | Work Ports | Axial Twin Ports | ISO METR | **CMV 85**

In the following you will find the technical specifications of the work ports. They are clustered according to the related mounting flange and nominal size. In the section [Model Code & Availability], you can then check the availability of the work ports in combination with additional functions integrated in the port plate housing. So please have a look at model-code [item 10. Port Plate housing] and compile your desired configuration.

## Dimensions - Side view

**E4|XX**

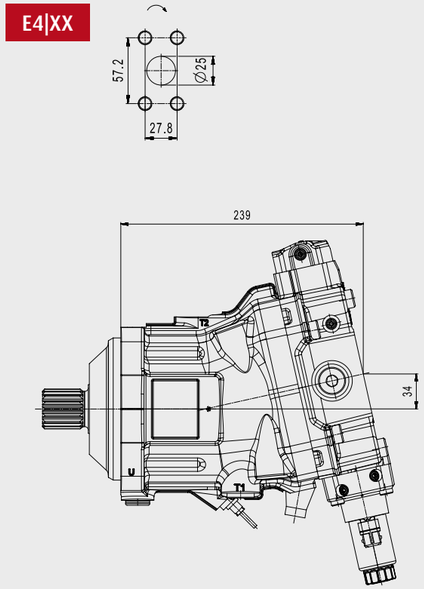


**E6|XX**

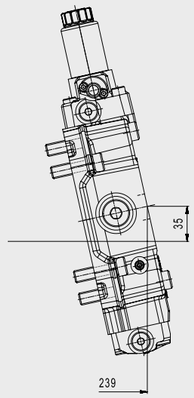


## Dimensions - Back view

**E4|XX**

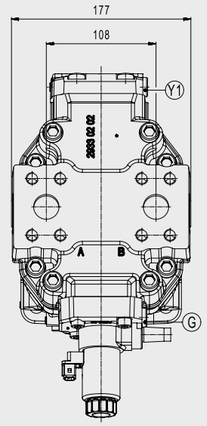


**E6|XX**

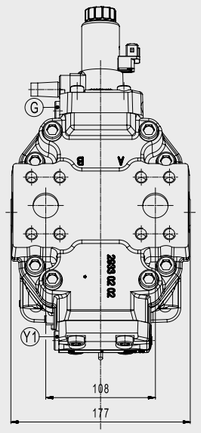


| | |
|---|---|
| E4\|XX | Configuration with negative control (E4 displacement control). The other options shown do not determine the position of the w. ports and are chosen as an example. |
| E6\|XX | Configuration with positive control (E6 displacement control). The other options shown do not determine the position of the w. ports and are chosen as an example. |

| | |
|---|---|
| A | High pressure work port, ISO 6162-2, SAE 1“<br>If pressurised - motor runs clockwise<br>Nom. pres.: 450 bar, max. press.: 500 bar |
| B | High pressure work port, ISO 6162-2, SAE 1“<br>If pressurised - motor runs counter-clockwise<br>Nom. pres.: 450 bar, max. press.: 500 bar |

| | |
|---|---|
| AX | Pressure equalization port |
| BX | |
| T1 | Drain / vent port, ISO 6149, M22x1.5, 15.5 mm deep |
| T2 | Drain / vent port, ISO 6149, M27x2, 19 mm deep |

| | |
|---|---|
| G | Ext. control pressure supply, ISO 6149, M14x1.5, 11.5 mm deep |
| U | Bearing flush port, ISO 6149, M18x1.5, 14.5 mm deep |
| Y1 | Measuring port, ISO 6149, M14x1.5, 11.5 mm deep |
| | |

# Technical Specification | Work Ports | Axial Twin Ports | ISO METR | **CMV 115**


OVERVIEW
- Key Facts

CONFIGURATION
- Modelcode & Availability

TECHNICAL SPECIFICATION
- General Technical Data
- Operating Parameters
- Controls
- Sensors
- Electric Interfaces
  - Connectors
- Mechanical Interfaces
  - Flanges
  - Shafts
- Hydraulical Interfaces
  - Work Ports
  - Auxiliary Ports
- Functions/Options

AXIAL TWIN PORTS ISO 6162-2
- In combination with ISO 3019-1 / SAE J744 — CMV 60-215
- In combination with ISO 3019-2 metric — CMV 60-215
- In combination with PLUG-IN, SIM. TO ISO 3019-2 — CMV 60-215

SIDE PORTS ISO 6162-2
- In combination with ISO 3019-1 / SAE J744 — CMV 60-215
- In combination with ISO 3019-2 metric — CMV 60-215
- In combination with PLUG-IN, SIM. TO ISO 3019-2 — CMV 60-215

RADIAL TWIN PORTS ISO 6162-2
- In combination with ISO 3019-1 / SAE J744 — CMV 60-215
- In combination with ISO 3019-2 metric — CMV 60-215
- In combination with PLUG-IN, SIM. TO ISO 3019-2 — CMV 60-215


In the following you will find the technical specifications of the work ports. They are clustered according to the related mounting flange and nominal size. In the section [Model Code & Availability], you can then check the availability of the work ports in combination with additional functions integrated in the port plate housing. So please have a look at model-code [item 10. Port Plate housing] and compile your desired configuration.

## Dimensions - Side view

**E4|XX**

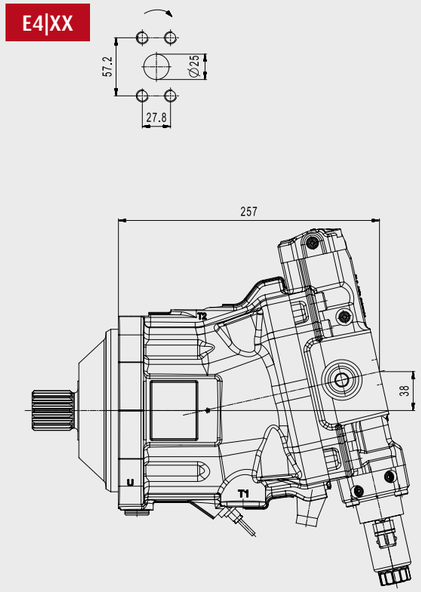


**E6|XX**

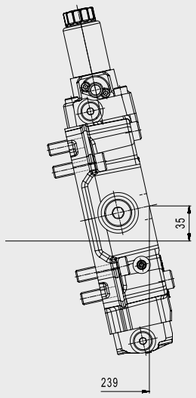


## Dimensions - Back view

**E4|XX**

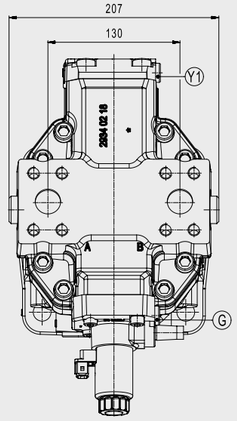


**E6|XX**

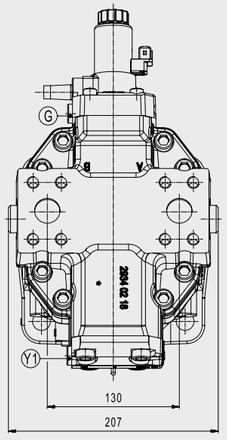


| | | | |
|---|---|---|---|
| E4\|XX | Configuration with negative control (E4 displacement control). The other options shown do not determine the position of the w. ports and are chosen as an example. | A | High pressure work port, ISO 6162-2, SAE 1“<br>If pressurised - motor runs clockwise<br>Nom. pres.: 450 bar, max. press.: 500 bar |
| E6\|XX | Configuration with positive control (E6 displacement control). The other options shown do not determine the position of the w. ports and are chosen as an example. | B | High pressure work port, ISO 6162-2, SAE 1“<br>If pressurised - motor runs counter-clockwise<br>Nom. pres.: 450 bar, max. press.: 500 bar |

| | | | |
|---|---|---|---|
| AX | Pressure equalization port | G | Ext. control pressure supply, ISO 6149, M14x1.5, 11.5 mm deep |
| BX | | U | Bearing flush port, ISO 6149, M18x1.5, 14.5 mm deep |
| T1 | Drain / vent port, ISO 6149, M27x2, 19 mm deep | Y1 | Measuring port, ISO 6149, M14x1.5, 11.5 mm deep |
| T2 | Drain / vent port, ISO 6149, M33x2, 19 mm deep | | |

# Technical Specification | Work Ports | Axial Twin Ports | ISO METR | **CMV 140**


OVERVIEW
- Key Facts

CONFIGURATION
- Modelcode & Availability

TECHNICAL SPECIFICATION
- General Technical Data
- Operating Parameters
- Controls
- Sensors
- Electric Interfaces
  - Connectors
- Mechanical Interfaces
  - Flanges
  - Shafts
- Hydraulical Interfaces
  - Work Ports
  - Auxiliary Ports
- Functions/Options

AXIAL TWIN PORTS ISO 6162-2
- In combination with ISO 3019-1 / SAE J744 — CMV 60-215
- In combination with ISO 3019-2 metric — CMV 60-215
- In combination with PLUG-IN, SIM. TO ISO 3019-2 — CMV 60-215

SIDE PORTS ISO 6162-2
- In combination with ISO 3019-1 / SAE J744 — CMV 60-215
- In combination with ISO 3019-2 metric — CMV 60-215
- In combination with PLUG-IN, SIM. TO ISO 3019-2 — CMV 60-215

RADIAL TWIN PORTS ISO 6162-2
- In combination with ISO 3019-1 / SAE J744 — CMV 60-215
- In combination with ISO 3019-2 metric — CMV 60-215
- In combination with PLUG-IN, SIM. TO ISO 3019-2 — CMV 60-215


In the following you will find the technical specifications of the work ports. They are clustered according to the related mounting flange and nominal size. In the section [Model Code & Availability], you can then check the availability of the work ports in combination with additional functions integrated in the port plate housing. So please have a look at model-code [item 10. Port Plate housing] and compile your desired configuration.

## Dimensions - Side view

**E4|XX**

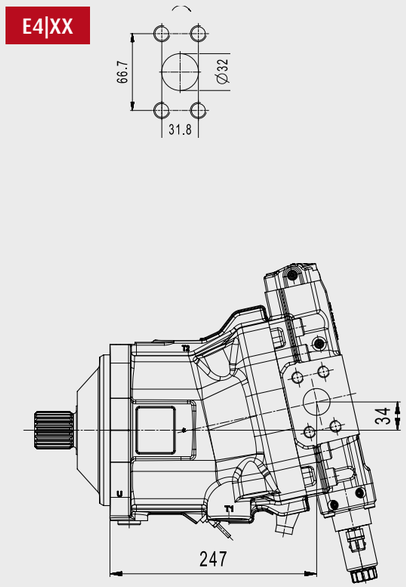


**E6|XX**

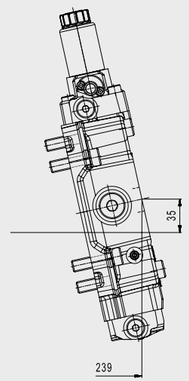


## Dimensions - Back view

**E4|XX**

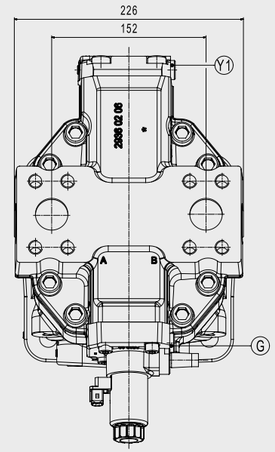


**E6|XX**

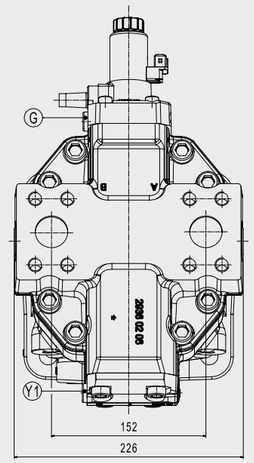


| | |
|---|---|
| E4\|XX | Configuration with negative control (E4 displacement control). The other options shown do not determine the position of the w. ports and are chosen as an example. |
| E6\|XX | Configuration with positive control (E6 displacement control). The other options shown do not determine the position of the w. ports and are chosen as an example. |

| | |
|---|---|
| A | High pressure work port, ISO 6162-2, SAE 1 1/4“<br>If pressurised - motor runs clockwise<br>Nom. pres.: 450 bar, max. press.: 500 bar |
| B | High pressure work port, ISO 6162-2, SAE 1 1/4“<br>If pressurised - motor runs counter-clockwise<br>Nom. pres.: 450 bar, max. press.: 500 bar |

| | |
|---|---|
| AX | Pressure equalization port |
| BX | |
| T1 | Drain / vent port, ISO 6149, M27x2, 19 mm deep |
| T2 | Drain / vent port, ISO 6149, M33x2, 19 mm deep |

| | |
|---|---|
| G | Ext. control pressure supply, ISO 6149, M14x1.5, 11.5 mm deep |
| U | Bearing flush port, ISO 6149, M22x1.5, 15.5 mm deep |
| Y1 | Measuring port, ISO 6149, M14x1.5, 11.5 mm deep |
| | |

OVERVIEW
- Key Facts

CONFIGURATION
- Modelcode & Availability

TECHNICAL SPECIFICATION
- General Technical Data
- Operating Parameters
- Controls
- Sensors
- Electric Interfaces
  - Connectors
- Mechanical Interfaces
  - Flanges
  - Shafts
- Hydraulical Interfaces
  - Work Ports
  - Auxiliary Ports
- Functions/Options

AXIAL TWIN PORTS ISO 6162-2
- In combination with ISO 3019-1 / SAE J744 — CMV 60-215
- In combination with ISO 3019-2 metric — CMV 60-215
- In combination with PLUG-IN, SIM. TO ISO 3019-2 — CMV 60-215

SIDE PORTS ISO 6162-2
- In combination with ISO 3019-1 / SAE J744 — CMV 60-215
- In combination with ISO 3019-2 metric — CMV 60-215
- In combination with PLUG-IN, SIM. TO ISO 3019-2 — CMV 60-215

RADIAL TWIN PORTS ISO 6162-2
- In combination with ISO 3019-1 / SAE J744 — CMV 60-215
- In combination with ISO 3019-2 metric — CMV 60-215
- In combination with PLUG-IN, SIM. TO ISO 3019-2 — CMV 60-215


# Technical Specification | Work Ports | Axial Twin Ports | ISO METR | **CMV 170**

In the following you will find the technical specifications of the work ports. They are clustered according to the related mounting flange and nominal size. In the section [Model Code & Availability], you can then check the availability of the work ports in combination with additional functions integrated in the port plate housing. So please have a look at model-code [item 10. Port Plate housing] and compile your desired configuration.

## Dimensions - Side view

**E4|XX**

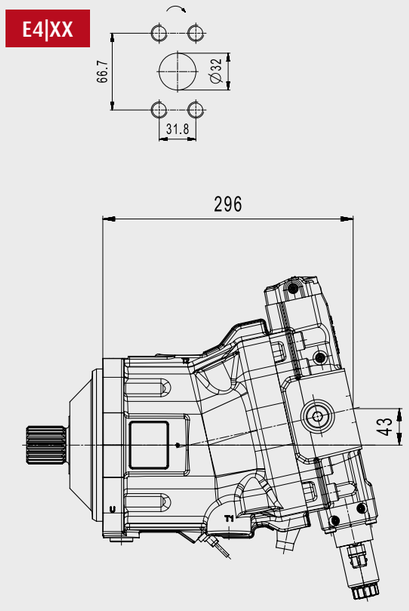


**E6|XX**

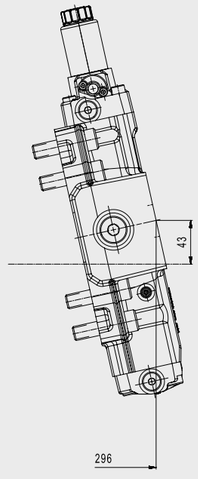


## Dimensions - Back view

**E4|XX**

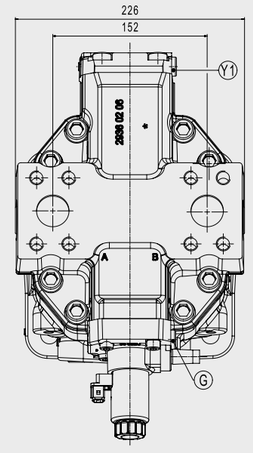


**E6|XX**

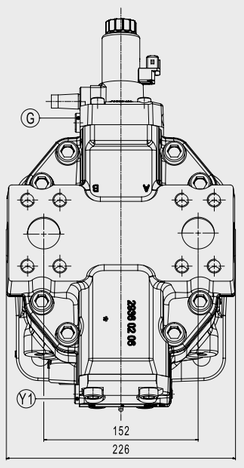


| | |
|---|---|
| E4\|XX | Configuration with negative control (E4 displacement control). The other options shown do not determine the position of the w. ports and are chosen as an example. |
| E6\|XX | Configuration with positive control (E6 displacement control). The other options shown do not determine the position of the w. ports and are chosen as an example. |

| | |
|---|---|
| A | High pressure work port, ISO 6162-2, SAE 1 1/4“<br>If pressurised - motor runs clockwise<br>Nom. pres.: 450 bar, max. press.: 500 bar |
| B | High pressure work port, ISO 6162-2, SAE 1 1/4“<br>If pressurised - motor runs counter-clockwise<br>Nom. pres.: 450 bar, max. press.: 500 bar |

| | |
|---|---|
| AX | Pressure equalization port, ISO 6149, M14x1.5, 11.5 mm deep |
| BX | |
| T1 | Drain / vent port, ISO 6149, M27x2, 19 mm deep |
| T2 | Drain / vent port, ISO 6149, M33x2, 19 mm deep |

| | |
|---|---|
| G | Ext. control pressure supply, ISO 6149, M14x1.5, 11.5 mm deep |
| U | Bearing flush port, ISO 6149, M22x1.5, 15.5 mm deep |
| Y1 | Measuring port, ISO 6149, M14x1.5, 11.5 mm deep |
| | |

# Technical Specification | Work Ports | Axial Twin Ports | ISO METR | **CMV 215**


OVERVIEW
- Key Facts

CONFIGURATION
- Modelcode & Availability

TECHNICAL SPECIFICATION
- General Technical Data
- Operating Parameters
- Controls
- Sensors
- Electric Interfaces
  - Connectors
- Mechanical Interfaces
  - Flanges
  - Shafts
- Hydraulical Interfaces
  - Work Ports
  - Auxiliary Ports
- Functions/Options

AXIAL TWIN PORTS ISO 6162-2
- In combination with ISO 3019-1 / SAE J744 — CMV 60-215
- In combination with ISO 3019-2 metric — CMV 60-215
- In combination with PLUG-IN, SIM. TO ISO 3019-2 — CMV 60-215

SIDE PORTS ISO 6162-2
- In combination with ISO 3019-1 / SAE J744 — CMV 60-215
- In combination with ISO 3019-2 metric — CMV 60-215
- In combination with PLUG-IN, SIM. TO ISO 3019-2 — CMV 60-215

RADIAL TWIN PORTS ISO 6162-2
- In combination with ISO 3019-1 / SAE J744 — CMV 60-215
- In combination with ISO 3019-2 metric — CMV 60-215
- In combination with PLUG-IN, SIM. TO ISO 3019-2 — CMV 60-215


In the following you will find the technical specifications of the work ports. They are clustered according to the related mounting flange and nominal size. In the section [Model Code & Availability], you can then check the availability of the work ports in combination with additional functions integrated in the port plate housing. So please have a look at model-code [item 10. Port Plate housing] and compile your desired configuration.

## Dimensions - Side view

**E4|XX**

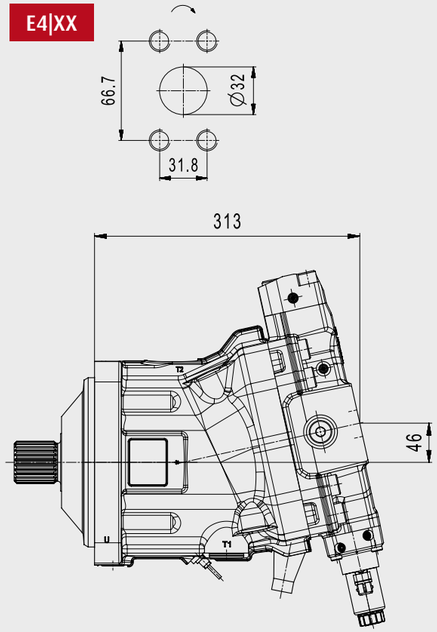


**E6|XX**

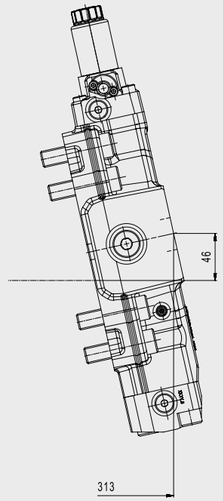


## Dimensions - Back view

**E4|XX**

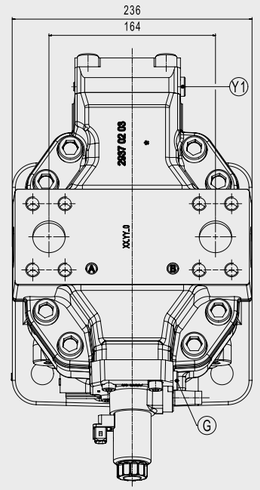


**E6|XX**

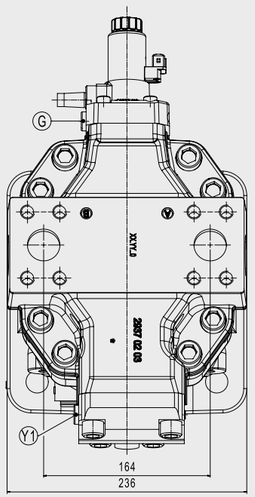


| | |
|---|---|
| E4\|XX | Configuration with negative control (E4 displacement control). The other options shown do not determine the position of the w. ports and are chosen as an example. |
| E6\|XX | Configuration with positive control (E6 displacement control). The other options shown do not determine the position of the w. ports and are chosen as an example. |

| | |
|---|---|
| A | High pressure work port, ISO 6162-2, SAE 1 1/4“<br>If pressurised - motor runs clockwise<br>Nom. pres.: 450 bar, max. press.: 500 bar |
| B | High pressure work port, ISO 6162-2, SAE 1 1/4“<br>If pressurised - motor runs counter-clockwise<br>Nom. pres.: 450 bar, max. press.: 500 bar |

| | |
|---|---|
| AX<br>BX | Pressure equalization port, ISO 6149, M22x1.5, 15.5 mm deep |
| T1 | Drain / vent port, ISO 6149, M33x2, 19 mm deep |
| T2 | Drain / vent port, ISO 6149, M42x2, 19.5 mm deep |

| | |
|---|---|
| G | Ext. control pressure supply, ISO 6149, M14x1.5, 11.5 mm deep |
| U | Bearing flush port, ISO 6149, M22x1.5, 15.5 mm deep |
| Y1 | Measuring port, ISO 6149, M14x1.5, 11.5 mm deep |

# Technical Specification | Work Ports | Axial Twin Ports | Plug-In | **CMV 60**


OVERVIEW
- Key Facts

CONFIGURATION
- Modelcode & Availability

TECHNICAL SPECIFICATION
- General Technical Data
- Operating Parameters
- Controls
- Sensors
- Electric Interfaces
  - Connectors
- Mechanical Interfaces
  - Flanges
  - Shafts
- Hydraulical Interfaces
  - Work Ports
  - Auxiliary Ports
- Functions/Options

AXIAL TWIN PORTS ISO 6162-2
- In combination with ISO 3019-1 / SAE J744 — CMV 60-215
- In combination with ISO 3019-2 metric — CMV 60-215
- In combination with PLUG-IN, SIM. TO ISO 3019-2 — CMV 60-215

SIDE PORTS ISO 6162-2
- In combination with ISO 3019-1 / SAE J744 — CMV 60-215
- In combination with ISO 3019-2 metric — CMV 60-215
- In combination with PLUG-IN, SIM. TO ISO 3019-2 — CMV 60-215

RADIAL TWIN PORTS ISO 6162-2
- In combination with ISO 3019-1 / SAE J744 — CMV 60-215
- In combination with ISO 3019-2 metric — CMV 60-215
- In combination with PLUG-IN, SIM. TO ISO 3019-2 — CMV 60-215


In the following you will find the technical specifications of the work ports. They are clustered according to the related mounting flange and nominal size. In the section [Model Code & Availability], you can then check the availability of the work ports in combination with additional functions integrated in the port plate housing. So please have a look at model-code [item 10. Port Plate housing] and compile your desired configuration.

## Dimensions - Side view

**E4|XX**

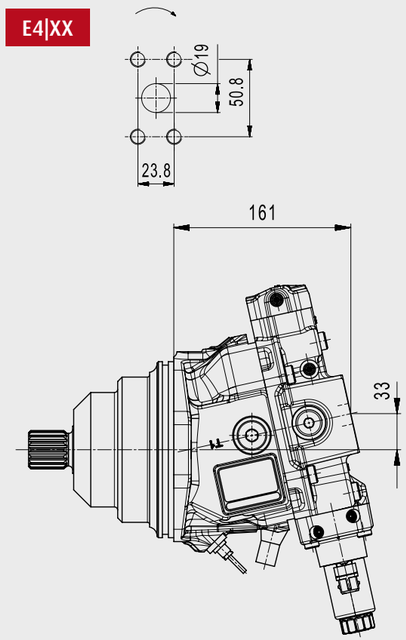


**E6|XX**

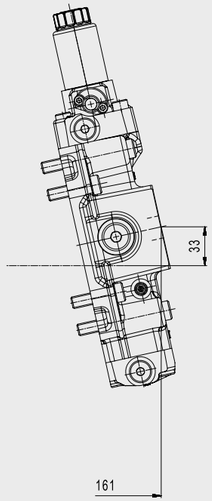


## Dimensions - Back view

**E4|XX**

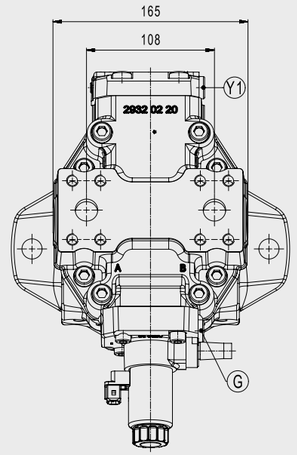


**E6|XX**

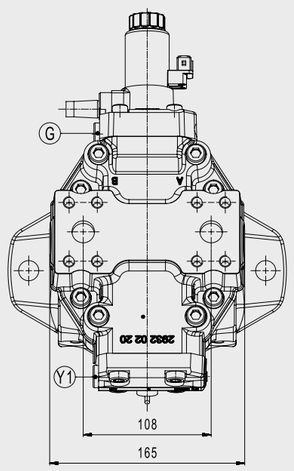


| | |
|---|---|
| E4\|XX | Configuration with negative control (E4 displacement control). The other options shown do not determine the position of the w. ports and are chosen as an example. |
| E6\|XX | Configuration with positive control (E6 displacement control). The other options shown do not determine the position of the w. ports and are chosen as an example. |

| | |
|---|---|
| A | High pressure work port, ISO 6162-2,<br>If pressurised - motor runs clockwise<br>Nom. pres.: 450 bar, max. press.: 500 bar |
| B | High pressure work port, ISO 6162-2,<br>If pressurised - motor runs counter-clockwise<br>Nom. pres.: 450 bar, max. press.: 500 bar |

| | |
|---|---|
| AX<br>BX | Pressure equalization port |
| T1 | Drain / vent port, ISO 6149 |
| T2 | Drain / vent port, ISO 6149 |

| | |
|---|---|
| G | Ext. control pressure supply, ISO 6149 |
| U | Bearing flush port, ISO 6149 |
| Y1 | Measuring port, ISO 6149 |
| | |

OVERVIEW
- Key Facts

CONFIGURATION
- Modelcode & Availability

TECHNICAL SPECIFICATION
- General Technical Data
- Operating Parameters
- Controls
- Sensors
- Electric Interfaces
  - Connectors
- Mechanical Interfaces
  - Flanges
  - Shafts
- Hydraulical Interfaces
  - Work Ports
  - Auxiliary Ports
- Functions/Options

AXIAL TWIN PORTS ISO 6162-2
- In combination with ISO 3019-1 / SAE J744 — CMV 60-215
- In combination with ISO 3019-2 metric — CMV 60-215
- In combination with PLUG-IN, SIM. TO ISO 3019-2 — CMV 60-215

SIDE PORTS ISO 6162-2
- In combination with ISO 3019-1 / SAE J744 — CMV 60-215
- In combination with ISO 3019-2 metric — CMV 60-215
- In combination with PLUG-IN, SIM. TO ISO 3019-2 — CMV 60-215

RADIAL TWIN PORTS ISO 6162-2
- In combination with ISO 3019-1 / SAE J744 — CMV 60-215
- In combination with ISO 3019-2 metric — CMV 60-215
- In combination with PLUG-IN, SIM. TO ISO 3019-2 — CMV 60-215


# Technical Specification | Work Ports | Axial Twin Ports | Plug-In | **CMV 85**

In the following you will find the technical specifications of the work ports. They are clustered according to the related mounting flange and nominal size. In the section [Model Code & Availability], you can then check the availability of the work ports in combination with additional functions integrated in the port plate housing. So please have a look at model-code [item 10. Port Plate housing] and compile your desired configuration.

## Dimensions - Side view

**E4|XX**

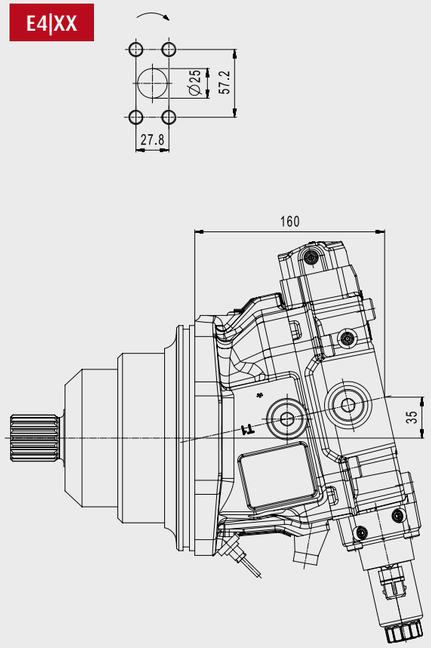


**E6|XX**

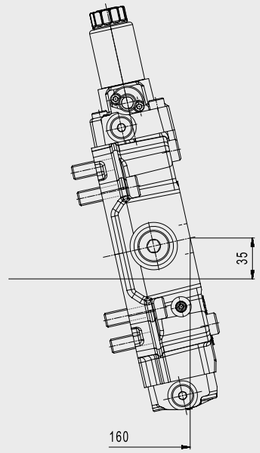


## Dimensions - Back view

**E4|XX**

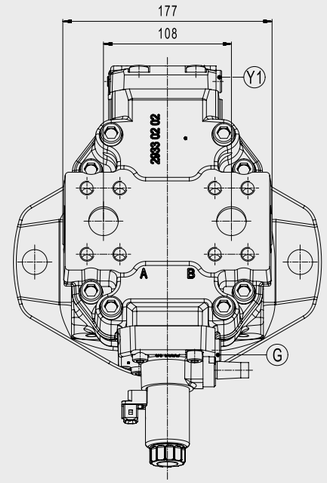


**E6|XX**

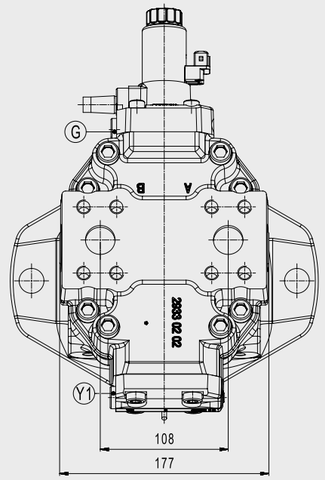


| | |
|---|---|
| E4\|XX | Configuration with negative control (E4 displacement control). The other options shown do not determine the position of the w. ports and are chosen as an example. |
| E6\|XX | Configuration with positive control (E6 displacement control). The other options shown do not determine the position of the w. ports and are chosen as an example. |

| | |
|---|---|
| A | High pressure work port, ISO 6162-2, SAE 1“<br>If pressurised - motor runs clockwise<br>Nom. pres.: 450 bar, max. press.: 500 bar |
| B | High pressure work port, ISO 6162-2, SAE 1“<br>If pressurised - motor runs counter-clockwise<br>Nom. pres.: 450 bar, max. press.: 500 bar |

| | |
|---|---|
| AX | Pressure equalization port |
| BX | |
| T1 | Drain / vent port, ISO 6149, M22x1.5, 15.5 mm deep |
| T2 | Drain / vent port, ISO 6149, M27x2, 19 mm deep |

| | |
|---|---|
| G | Ext. control pressure supply, ISO 6149, M14x1.5, 11.5 mm deep |
| U | Bearing flush port, ISO 6149, M18x1.5, 14.5 mm deep |
| Y1 | Measuring port, ISO 6149, M14x1.5, 11.5 mm deep |
| | |

# Technical Specification | Work Ports | Axial Twin Ports | Plug-In | **CMV 115**

In the following you will find the technical specifications of the work ports. They are clustered according to the related mounting flange and nominal size. In the section [Model Code & Availability], you can then check the availability of the work ports in combination with additional functions integrated in the port plate housing. So please have a look at model-code [item 10. Port Plate housing] and compile your desired configuration.

## Dimensions - Side view

**E4|XX**

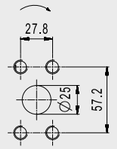


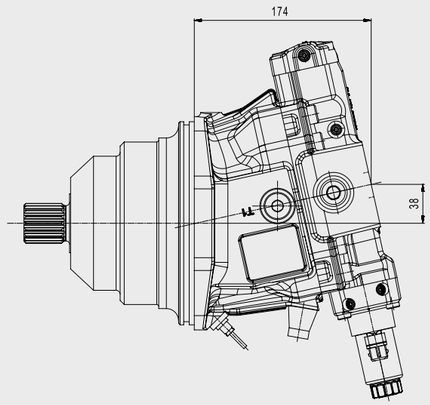


**E6|XX**

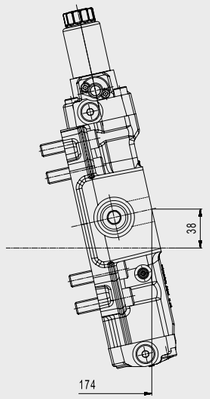


## Dimensions - Back view

**E4|XX**

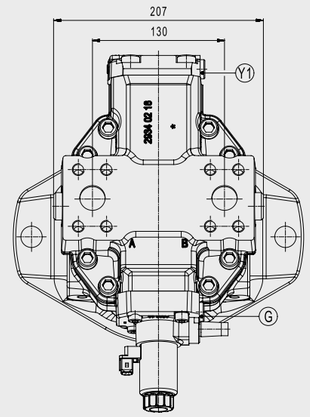


**E6|XX**

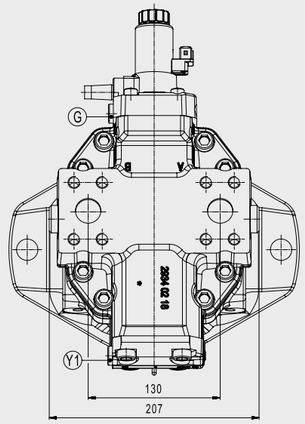


| | |
|---|---|
| E4\|XX | Configuration with negative control (E4 displacement control). The other options shown do not determine the position of the w. ports and are chosen as an example. |
| E6\|XX | Configuration with positive control (E6 displacement control). The other options shown do not determine the position of the w. ports and are chosen as an example. |

| | |
|---|---|
| A | High pressure work port, ISO 6162-2, SAE 1“<br>If pressurised - motor runs clockwise<br>Nom. pres.: 450 bar, max. press.: 500 bar |
| B | High pressure work port, ISO 6162-2, SAE 1“<br>If pressurised - motor runs counter-clockwise<br>Nom. pres.: 450 bar, max. press.: 500 bar |

| | |
|---|---|
| AX | Pressure equalization port |
| BX | |
| T1 | Drain / vent port, ISO 6149, M27x2, 19 mm deep |
| T2 | Drain / vent port, ISO 6149, M33x2, 19 mm deep |

| | |
|---|---|
| G | Ext. control pressure supply, ISO 6149, M14x1.5, 11.5 mm deep |
| U | Bearing flush port, ISO 6149, M18x1.5, 14.5 mm deep |
| Y1 | Measuring port, ISO 6149, M14x1.5, 11.5 mm deep |
| | |

OVERVIEW
- Key Facts

CONFIGURATION
- Modelcode & Availability

TECHNICAL SPECIFICATION
- General Technical Data
- Operating Parameters
- Controls
- Sensors
- Electric Interfaces
  - Connectors
- Mechanical Interfaces
  - Flanges
  - Shafts
- Hydraulical Interfaces
  - Work Ports
  - Auxiliary Ports
- Functions/Options

AXIAL TWIN PORTS ISO 6162-2
- In combination with ISO 3019-1 / SAE J744 — CMV 60-215
- In combination with ISO 3019-2 metric — CMV 60-215
- In combination with PLUG-IN, SIM. TO ISO 3019-2 — CMV 60-215

SIDE PORTS ISO 6162-2
- In combination with ISO 3019-1 / SAE J744 — CMV 60-215
- In combination with ISO 3019-2 metric — CMV 60-215
- In combination with PLUG-IN, SIM. TO ISO 3019-2 — CMV 60-215

RADIAL TWIN PORTS ISO 6162-2
- In combination with ISO 3019-1 / SAE J744 — CMV 60-215
- In combination with ISO 3019-2 metric — CMV 60-215
- In combination with PLUG-IN, SIM. TO ISO 3019-2 — CMV 60-215


# Technical Specification | Work Ports | Axial Twin Ports | Plug-In | **CMV 140**

In the following you will find the technical specifications of the work ports. They are clustered according to the related mounting flange and nominal size. In the section [Model Code & Availability], you can then check the availability of the work ports in combination with additional functions integrated in the port plate housing. So please have a look at model-code [item 10. Port Plate housing] and compile your desired configuration.

## Dimensions - Side view

**E4|XX**

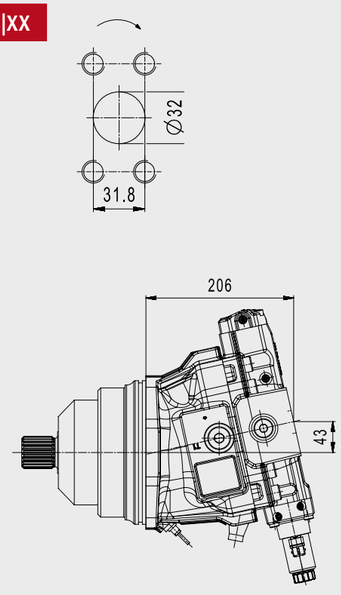


**E6|XX**

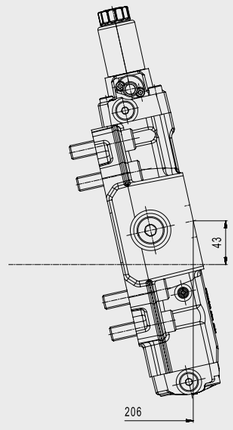


## Dimensions - Back view

**E4|XX**

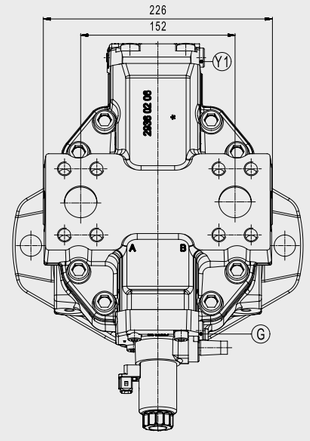


**E6|XX**

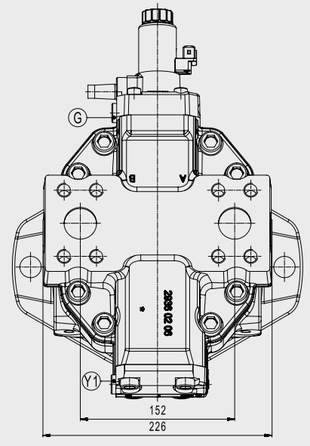


| | |
|---|---|
| E4\|XX | Configuration with negative control (E4 displacement control). The other options shown do not determine the position of the w. ports and are chosen as an example. |
| E6\|XX | Configuration with positive control (E6 displacement control). The other options shown do not determine the position of the w. ports and are chosen as an example. |

| | |
|---|---|
| A | High pressure work port, ISO 6162-2, SAE 1 1/4“<br>If pressurised - motor runs clockwise<br>Nom. pres.: 450 bar, max. press.: 500 bar |
| B | High pressure work port, ISO 6162-2, SAE 1 1/4“<br>If pressurised - motor runs counter-clockwise<br>Nom. pres.: 450 bar, max. press.: 500 bar |

| | |
|---|---|
| AX | Pressure equalization port |
| BX | |
| T1 | Drain / vent port, ISO 6149, M27x2, 19 mm deep |
| T2 | Drain / vent port, ISO 6149, M33x2, 19 mm deep |

| | |
|---|---|
| G | Ext. control pressure supply, ISO 6149, M14x1.5, 11.5 mm deep |
| U | Bearing flush port, ISO 6149, M22x1.5, 15.5 mm deep |
| Y1 | Measuring port, ISO 6149, M14x1.5, 11.5 mm deep |
| | |

# Technical Specification | Work Ports | Axial Twin Ports | Plug-In | **CMV 170**


OVERVIEW
- Key Facts

CONFIGURATION
- Modelcode & Availability

TECHNICAL SPECIFICATION
- General Technical Data
- Operating Parameters
- Controls
- Sensors
- Electric Interfaces
  - Connectors
- Mechanical Interfaces
  - Flanges
  - Shafts
- Hydraulical Interfaces
  - Work Ports
  - Auxiliary Ports
- Functions/Options

AXIAL TWIN PORTS ISO 6162-2
- In combination with ISO 3019-1 / SAE J744 — CMV 60-215
- In combination with ISO 3019-2 metric — CMV 60-215
- In combination with PLUG-IN, SIM. TO ISO 3019-2 — CMV 60-215

SIDE PORTS ISO 6162-2
- In combination with ISO 3019-1 / SAE J744 — CMV 60-215
- In combination with ISO 3019-2 metric — CMV 60-215
- In combination with PLUG-IN, SIM. TO ISO 3019-2 — CMV 60-215

RADIAL TWIN PORTS ISO 6162-2
- In combination with ISO 3019-1 / SAE J744 — CMV 60-215
- In combination with ISO 3019-2 metric — CMV 60-215
- In combination with PLUG-IN, SIM. TO ISO 3019-2 — CMV 60-215


In the following you will find the technical specifications of the work ports. They are clustered according to the related mounting flange and nominal size. In the section [Model Code & Availability], you can then check the availability of the work ports in combination with additional functions integrated in the port plate housing. So please have a look at model-code [item 10. Port Plate housing] and compile your desired configuration.

## Dimensions - Side view

**E4|XX**

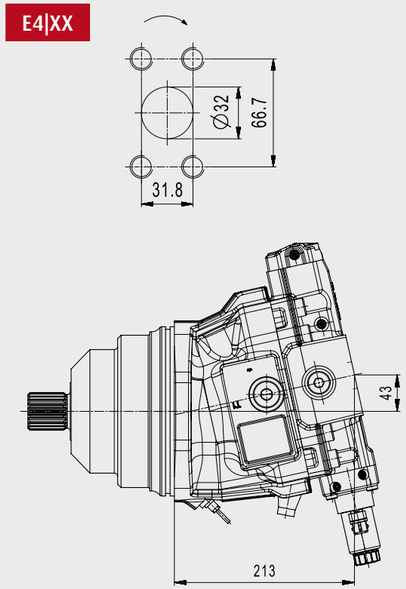


**E6|XX**

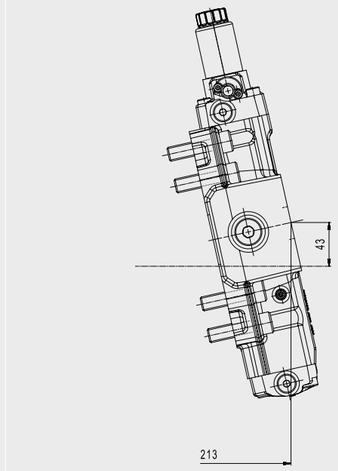


## Dimensions - Back view

**E4|XX**

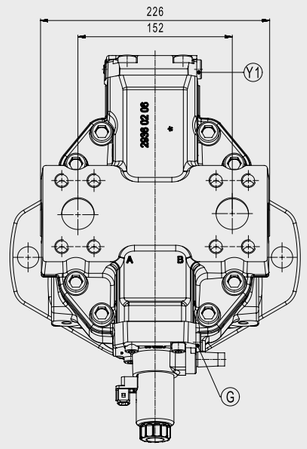


**E6|XX**

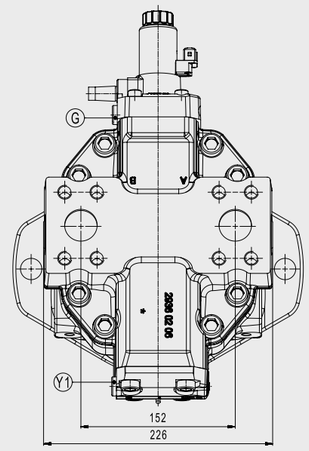


| | |
|---|---|
| E4\|XX | Configuration with negative control (E4 displacement control). The other options shown do not determine the position of the w. ports and are chosen as an example. |
| E6\|XX | Configuration with positive control (E6 displacement control). The other options shown do not determine the position of the w. ports and are chosen as an example. |

| | |
|---|---|
| A | High pressure work port, ISO 6162-2, SAE 1 1/4“<br>If pressurised - motor runs clockwise<br>Nom. pres.: 450 bar, max. press.: 500 bar |
| B | High pressure work port, ISO 6162-2, SAE 1 1/4“<br>If pressurised - motor runs counter-clockwise<br>Nom. pres.: 450 bar, max. press.: 500 bar |

| | |
|---|---|
| AX | Pressure equalization port, ISO 6149, M14x1.5, 11.5 mm deep |
| BX | |
| T1 | Drain / vent port, ISO 6149, M27x2, 19 mm deep |
| T2 | Drain / vent port, ISO 6149, M33x2, 19 mm deep |

| | |
|---|---|
| G | Ext. control pressure supply, ISO 6149, M14x1.5, 11.5 mm deep |
| U | Bearing flush port, ISO 6149, M22x1.5, 15.5 mm deep |
| Y1 | Measuring port, ISO 6149, M14x1.5, 11.5 mm deep |
| | |

# Technical Specification | Work Ports | Axial Twin Ports | Plug-In | **CMV 215**


OVERVIEW
- Key Facts

CONFIGURATION
- Modelcode & Availability

TECHNICAL SPECIFICATION
- General Technical Data
- Operating Parameters
- Controls
- Sensors
- Electric Interfaces
  - Connectors
- Mechanical Interfaces
  - Flanges
  - Shafts
- Hydraulical Interfaces
  - Work Ports
  - Auxiliary Ports
- Functions/Options

AXIAL TWIN PORTS ISO 6162-2
- In combination with ISO 3019-1 / SAE J744 — CMV 60-215
- In combination with ISO 3019-2 metric — CMV 60-215
- In combination with PLUG-IN, SIM. TO ISO 3019-2 — CMV 60-215

SIDE PORTS ISO 6162-2
- In combination with ISO 3019-1 / SAE J744 — CMV 60-215
- In combination with ISO 3019-2 metric — CMV 60-215
- In combination with PLUG-IN, SIM. TO ISO 3019-2 — CMV 60-215

RADIAL TWIN PORTS ISO 6162-2
- In combination with ISO 3019-1 / SAE J744 — CMV 60-215
- In combination with ISO 3019-2 metric — CMV 60-215
- In combination with PLUG-IN, SIM. TO ISO 3019-2 — CMV 60-215


In the following you will find the technical specifications of the work ports. They are clustered according to the related mounting flange and nominal size. In the section [Model Code & Availability], you can then check the availability of the work ports in combination with additional functions integrated in the port plate housing. So please have a look at model-code [item 10. Port Plate housing] and compile your desired configuration.

## Dimensions - Side view

**E4|XX**

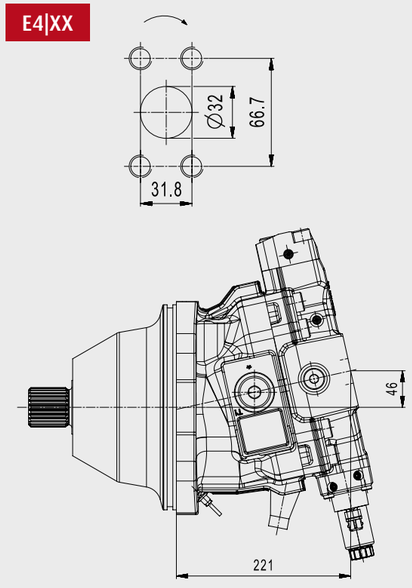


**E6|XX**

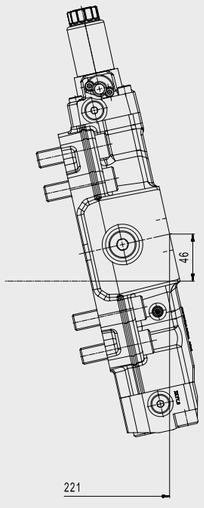


## Dimensions - Back view

**E4|XX**

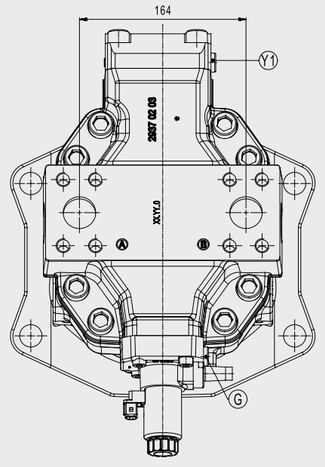


**E6|XX**

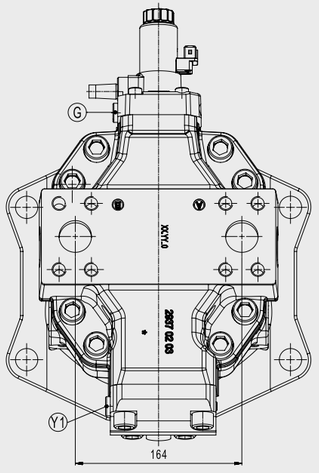


| | |
|---|---|
| E4\|XX | Configuration with negative control (E4 displacement control). The other options shown do not determine the position of the w. ports and are chosen as an example. |
| E6\|XX | Configuration with positive control (E6 displacement control). The other options shown do not determine the position of the w. ports and are chosen as an example. |

| | |
|---|---|
| A | High pressure work port, ISO 6162-2, SAE 1 1/4“<br>If pressurised - motor runs clockwise<br>Nom. pres.: 450 bar, max. press.: 500 bar |
| B | High pressure work port, ISO 6162-2, SAE 1 1/4“<br>If pressurised - motor runs counter-clockwise<br>Nom. pres.: 450 bar, max. press.: 500 bar |

| | |
|---|---|
| AX | Pressure equalization port, ISO 6149, M22x1.5, 15.5 mm deep |
| BX | |
| T1 | Drain / vent port, ISO 6149, M33x2, 19 mm deep |
| T2 | Drain / vent port, ISO 6149, M42x2, 19.5 mm deep |

| | |
|---|---|
| G | Ext. control pressure supply, ISO 6149, M14x1.5, 11.5 mm deep |
| U | Bearing flush port, ISO 6149, M22x1.5, 15.5 mm deep |
| Y1 | Measuring port, ISO 6149, M14x1.5, 11.5 mm deep |
| | |

# Technical Specification | Work Ports | Side Ports | ISO SAE | **CMV 60**


OVERVIEW
- Key Facts

CONFIGURATION
- Modelcode & Availability

TECHNICAL SPECIFICATION
- General Technical Data
- Operating Parameters
- Controls
- Sensors
- Electric Interfaces
  - Connectors
- Mechanical Interfaces
  - Flanges
  - Shafts
- Hydraulical Interfaces
  - Work Ports
  - Auxiliary Ports
- Functions/Options

AXIAL TWIN PORTS ISO 6162-2
- In combination with ISO 3019-1 / SAE J744 — CMV 60-215
- In combination with ISO 3019-2 metric — CMV 60-215
- In combination with PLUG-IN, SIM. TO ISO 3019-2 — CMV 60-215

SIDE PORTS ISO 6162-2
- In combination with ISO 3019-1 / SAE J744 — CMV 60-215
- In combination with ISO 3019-2 metric — CMV 60-215
- In combination with PLUG-IN, SIM. TO ISO 3019-2 — CMV 60-215

RADIAL TWIN PORTS ISO 6162-2
- In combination with ISO 3019-1 / SAE J744 — CMV 60-215
- In combination with ISO 3019-2 metric — CMV 60-215
- In combination with PLUG-IN, SIM. TO ISO 3019-2 — CMV 60-215


In the following you will find the technical specifications of the work ports. They are clustered according to the related mounting flange and nominal size. In the section [Model Code & Availability], you can then check the availability of the work ports in combination with additional functions integrated in the port plate housing. So please have a look at model-code [item 10. Port Plate housing] and compile your desired configuration.

## Dimensions - Side view

Dimensions upon request

Dimensions upon request

## Dimensions - Back view

Dimensions upon request

Dimensions upon request

# Technical Specification | Work Ports | Side Ports | ISO SAE | **CMV 85**


OVERVIEW
- Key Facts

CONFIGURATION
- Modelcode & Availability

TECHNICAL SPECIFICATION
- General Technical Data
- Operating Parameters
- Controls
- Sensors
- Electric Interfaces
  - Connectors
- Mechanical Interfaces
  - Flanges
  - Shafts
- Hydraulical Interfaces
  - Work Ports
  - Auxiliary Ports
- Functions/Options

AXIAL TWIN PORTS ISO 6162-2
- In combination with ISO 3019-1 / SAE J744 — CMV 60-215
- In combination with ISO 3019-2 metric — CMV 60-215
- In combination with PLUG-IN, SIM. TO ISO 3019-2 — CMV 60-215

SIDE PORTS ISO 6162-2
- In combination with ISO 3019-1 / SAE J744 — CMV 60-215
- In combination with ISO 3019-2 metric — CMV 60-215
- In combination with PLUG-IN, SIM. TO ISO 3019-2 — CMV 60-215

RADIAL TWIN PORTS ISO 6162-2
- In combination with ISO 3019-1 / SAE J744 — CMV 60-215
- In combination with ISO 3019-2 metric — CMV 60-215
- In combination with PLUG-IN, SIM. TO ISO 3019-2 — CMV 60-215


In the following you will find the technical specifications of the work ports. They are clustered according to the related mounting flange and nominal size. In the section [Model Code & Availability], you can then check the availability of the work ports in combination with additional functions integrated in the port plate housing. So please have a look at model-code [item 10. Port Plate housing] and compile your desired configuration.

## Dimensions - Side view

Dimensions upon request

Dimensions upon request

## Dimensions - Back view

Dimensions upon request

Dimensions upon request

# Technical Specification | Work Ports | Side Ports | ISO SAE | **CMV 115**


OVERVIEW
- Key Facts

CONFIGURATION
- Modelcode & Availability

TECHNICAL SPECIFICATION
- General Technical Data
- Operating Parameters
- Controls
- Sensors
- Electric Interfaces
  - Connectors
- Mechanical Interfaces
  - Flanges
  - Shafts
- Hydraulical Interfaces
  - Work Ports
  - Auxiliary Ports
- Functions/Options

AXIAL TWIN PORTS ISO 6162-2
- In combination with ISO 3019-1 / SAE J744 — CMV 60-215
- In combination with ISO 3019-2 metric — CMV 60-215
- In combination with PLUG-IN, SIM. TO ISO 3019-2 — CMV 60-215

SIDE PORTS ISO 6162-2
- In combination with ISO 3019-1 / SAE J744 — CMV 60-215
- In combination with ISO 3019-2 metric — CMV 60-215
- In combination with PLUG-IN, SIM. TO ISO 3019-2 — CMV 60-215

RADIAL TWIN PORTS ISO 6162-2
- In combination with ISO 3019-1 / SAE J744 — CMV 60-215
- In combination with ISO 3019-2 metric — CMV 60-215
- In combination with PLUG-IN, SIM. TO ISO 3019-2 — CMV 60-215


In the following you will find the technical specifications of the work ports. They are clustered according to the related mounting flange and nominal size. In the section [Model Code & Availability], you can then check the availability of the work ports in combination with additional functions integrated in the port plate housing. So please have a look at model-code [item 10. Port Plate housing] and compile your desired configuration.

## Dimensions - Side view

Dimensions upon request

Dimensions upon request

## Dimensions - Back view

Dimensions upon request

Dimensions upon request

# Technical Specification | Work Ports | Side Ports | ISO SAE | **CMV 140**


OVERVIEW
- Key Facts

CONFIGURATION
- Modelcode & Availability

TECHNICAL SPECIFICATION
- General Technical Data
- Operating Parameters
- Controls
- Sensors
- Electric Interfaces
  - Connectors
- Mechanical Interfaces
  - Flanges
  - Shafts
- Hydraulical Interfaces
  - Work Ports
  - Auxiliary Ports
- Functions/Options

AXIAL TWIN PORTS ISO 6162-2
- In combination with ISO 3019-1 / SAE J744 — CMV 60-215
- In combination with ISO 3019-2 metric — CMV 60-215
- In combination with PLUG-IN, SIM. TO ISO 3019-2 — CMV 60-215

SIDE PORTS ISO 6162-2
- In combination with ISO 3019-1 / SAE J744 — CMV 60-215
- In combination with ISO 3019-2 metric — CMV 60-215
- In combination with PLUG-IN, SIM. TO ISO 3019-2 — CMV 60-215

RADIAL TWIN PORTS ISO 6162-2
- In combination with ISO 3019-1 / SAE J744 — CMV 60-215
- In combination with ISO 3019-2 metric — CMV 60-215
- In combination with PLUG-IN, SIM. TO ISO 3019-2 — CMV 60-215


In the following you will find the technical specifications of the work ports. They are clustered according to the related mounting flange and nominal size. In the section [Model Code & Availability], you can then check the availability of the work ports in combination with additional functions integrated in the port plate housing. So please have a look at model-code [item 10. Port Plate housing] and compile your desired configuration.

## Dimensions - Side view

Dimensions upon request

Dimensions upon request

## Dimensions - Back view

Dimensions upon request

Dimensions upon request

# Technical Specification | Work Ports | Side Ports | ISO SAE | **CMV 170**


OVERVIEW
- Key Facts

CONFIGURATION
- Modelcode & Availability

TECHNICAL SPECIFICATION
- General Technical Data
- Operating Parameters
- Controls
- Sensors
- Electric Interfaces
  - Connectors
- Mechanical Interfaces
  - Flanges
  - Shafts
- Hydraulical Interfaces
  - Work Ports
  - Auxiliary Ports
- Functions/Options

AXIAL TWIN PORTS ISO 6162-2
- In combination with ISO 3019-1 / SAE J744 — CMV 60-215
- In combination with ISO 3019-2 metric — CMV 60-215
- In combination with PLUG-IN, SIM. TO ISO 3019-2 — CMV 60-215

SIDE PORTS ISO 6162-2
- In combination with ISO 3019-1 / SAE J744 — CMV 60-215
- In combination with ISO 3019-2 metric — CMV 60-215
- In combination with PLUG-IN, SIM. TO ISO 3019-2 — CMV 60-215

RADIAL TWIN PORTS ISO 6162-2
- In combination with ISO 3019-1 / SAE J744 — CMV 60-215
- In combination with ISO 3019-2 metric — CMV 60-215
- In combination with PLUG-IN, SIM. TO ISO 3019-2 — CMV 60-215


In the following you will find the technical specifications of the work ports. They are clustered according to the related mounting flange and nominal size. In the section [Model Code & Availability], you can then check the availability of the work ports in combination with additional functions integrated in the port plate housing. So please have a look at model-code [item 10. Port Plate housing] and compile your desired configuration.

## Dimensions - Side view

Dimensions upon request

Dimensions upon request

## Dimensions - Back view

Dimensions upon request

Dimensions upon request

# Technical Specification | Work Ports | Side Ports | ISO SAE | **CMV 215**


OVERVIEW
- Key Facts

CONFIGURATION
- Modelcode & Availability

TECHNICAL SPECIFICATION
- General Technical Data
- Operating Parameters
- Controls
- Sensors
- Electric Interfaces
  - Connectors
- Mechanical Interfaces
  - Flanges
  - Shafts
- Hydraulical Interfaces
  - Work Ports
  - Auxiliary Ports
- Functions/Options

AXIAL TWIN PORTS ISO 6162-2
- In combination with ISO 3019-1 / SAE J744 — CMV 60-215
- In combination with ISO 3019-2 metric — CMV 60-215
- In combination with PLUG-IN, SIM. TO ISO 3019-2 — CMV 60-215

SIDE PORTS ISO 6162-2
- In combination with ISO 3019-1 / SAE J744 — CMV 60-215
- In combination with ISO 3019-2 metric — CMV 60-215
- In combination with PLUG-IN, SIM. TO ISO 3019-2 — CMV 60-215

RADIAL TWIN PORTS ISO 6162-2
- In combination with ISO 3019-1 / SAE J744 — CMV 60-215
- In combination with ISO 3019-2 metric — CMV 60-215
- In combination with PLUG-IN, SIM. TO ISO 3019-2 — CMV 60-215


In the following you will find the technical specifications of the work ports. They are clustered according to the related mounting flange and nominal size. In the section [Model Code & Availability], you can then check the availability of the work ports in combination with additional functions integrated in the port plate housing. So please have a look at model-code [item 10. Port Plate housing] and compile your desired configuration.

## Dimensions - Side view

Dimensions upon request

Dimensions upon request

## Dimensions - Back view

Dimensions upon request

Dimensions upon request

# Technical Specification | Work Ports | Side Ports | ISO METR | **CMV 60**


OVERVIEW
- Key Facts

CONFIGURATION
- Modelcode & Availability

TECHNICAL SPECIFICATION
- General Technical Data
- Operating Parameters
- Controls
- Sensors
- Electric Interfaces
  - Connectors
- Mechanical Interfaces
  - Flanges
  - Shafts
- Hydraulical Interfaces
  - Work Ports
  - Auxiliary Ports
- Functions/Options

AXIAL TWIN PORTS ISO 6162-2
- In combination with ISO 3019-1 / SAE J744 — CMV 60-215
- In combination with ISO 3019-2 metric — CMV 60-215
- In combination with PLUG-IN, SIM. TO ISO 3019-2 — CMV 60-215

SIDE PORTS ISO 6162-2
- In combination with ISO 3019-1 / SAE J744 — CMV 60-215
- In combination with ISO 3019-2 metric — CMV 60-215
- In combination with PLUG-IN, SIM. TO ISO 3019-2 — CMV 60-215

RADIAL TWIN PORTS ISO 6162-2
- In combination with ISO 3019-1 / SAE J744 — CMV 60-215
- In combination with ISO 3019-2 metric — CMV 60-215
- In combination with PLUG-IN, SIM. TO ISO 3019-2 — CMV 60-215


In the following you will find the technical specifications of the work ports. They are clustered according to the related mounting flange and nominal size. In the section [Model Code & Availability], you can then check the availability of the work ports in combination with additional functions integrated in the port plate housing. So please have a look at model-code [item 10. Port Plate housing] and compile your desired configuration.

## Dimensions - Side view

**E4|XX**

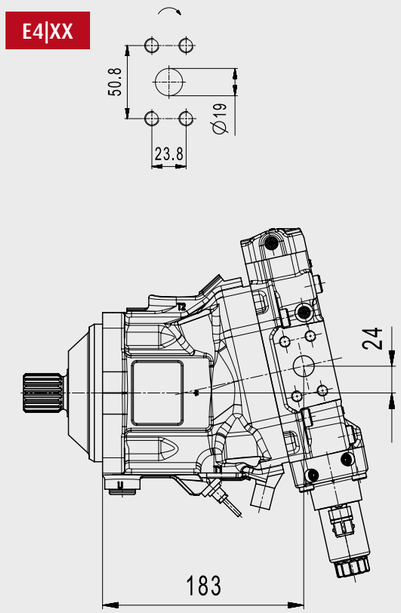


**E6|XX**

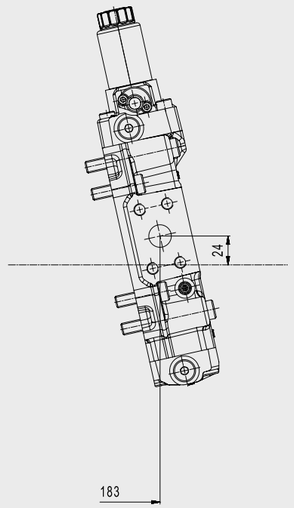


## Dimensions - Back view

**E4|XX**

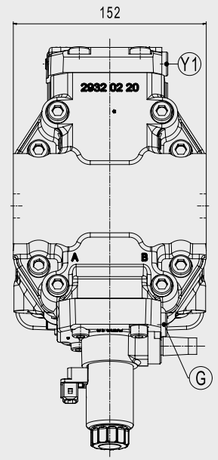


**E6|XX**

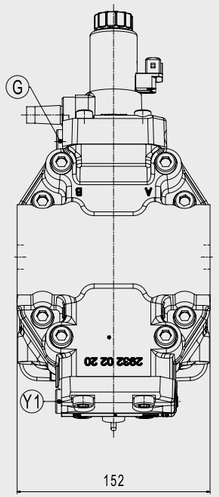


| | |
|---|---|
| E4\|XX | Configuration with negative control (E4 displacement control). The other options shown do not determine the position of the w. ports and are chosen as an example. |
| E6\|XX | Configuration with positive control (E6 displacement control). The other options shown do not determine the position of the w. ports and are chosen as an example. |

| | |
|---|---|
| A | High pressure work port, ISO 6162-2,<br>If pressurised - motor runs clockwise<br>Nom. pres.: 450 bar, max. press.: 500 bar |
| B | High pressure work port, ISO 6162-2,<br>If pressurised - motor runs counter-clockwise<br>Nom. pres.: 450 bar, max. press.: 500 bar |

| | |
|---|---|
| AX | Pressure equalization port |
| BX | |
| T1 | Drain / vent port, ISO 6149 |
| T2 | Drain / vent port, ISO 6149 |

| | |
|---|---|
| G | Ext. control pressure supply, ISO 6149 |
| U | Bearing flush port, ISO 6149 |
| Y1 | Measuring port, ISO 6149 |
| | |

# Technical Specification | Work Ports | Side Ports | ISO METR | **CMV 85**


OVERVIEW
- Key Facts

CONFIGURATION
- Modelcode & Availability

TECHNICAL SPECIFICATION
- General Technical Data
- Operating Parameters
- Controls
- Sensors
- Electric Interfaces
  - Connectors
- Mechanical Interfaces
  - Flanges
  - Shafts
- Hydraulical Interfaces
  - Work Ports
  - Auxiliary Ports
- Functions/Options

AXIAL TWIN PORTS ISO 6162-2
- In combination with ISO 3019-1 / SAE J744 — CMV 60-215
- In combination with ISO 3019-2 metric — CMV 60-215
- In combination with PLUG-IN, SIM. TO ISO 3019-2 — CMV 60-215

SIDE PORTS ISO 6162-2
- In combination with ISO 3019-1 / SAE J744 — CMV 60-215
- In combination with ISO 3019-2 metric — CMV 60-215
- In combination with PLUG-IN, SIM. TO ISO 3019-2 — CMV 60-215

RADIAL TWIN PORTS ISO 6162-2
- In combination with ISO 3019-1 / SAE J744 — CMV 60-215
- In combination with ISO 3019-2 metric — CMV 60-215
- In combination with PLUG-IN, SIM. TO ISO 3019-2 — CMV 60-215


In the following you will find the technical specifications of the work ports. They are clustered according to the related mounting flange and nominal size. In the section [Model Code & Availability], you can then check the availability of the work ports in combination with additional functions integrated in the port plate housing. So please have a look at model-code [item 10. Port Plate housing] and compile your desired configuration.

## Dimensions - Side view

**E4|XX**

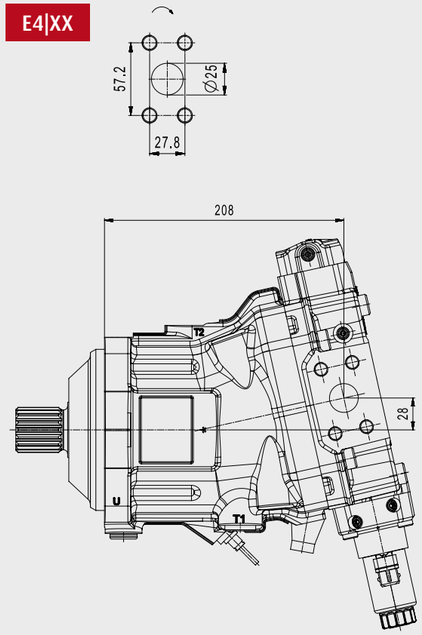


**E6|XX**

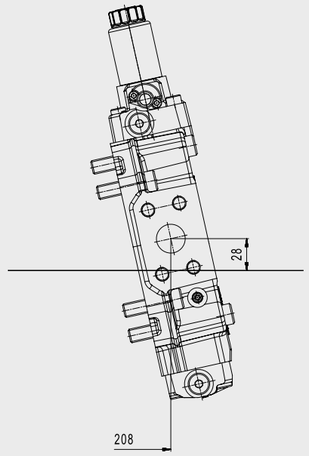


## Dimensions - Back view

**E4|XX**

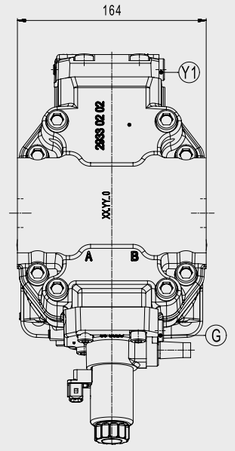


**E6|XX**

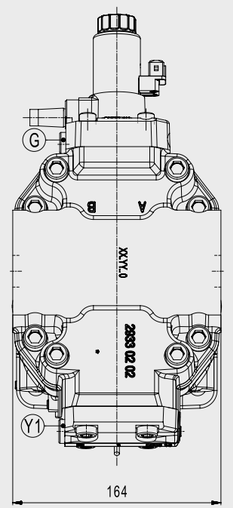


| | |
|---|---|
| E4\|XX | Configuration with negative control (E4 displacement control). The other options shown do not determine the position of the w. ports and are chosen as an example. |
| E6\|XX | Configuration with positive control (E6 displacement control). The other options shown do not determine the position of the w. ports and are chosen as an example. |

| | |
|---|---|
| A | High pressure work port, ISO 6162-2, SAE 1“<br>If pressurised - motor runs clockwise<br>Nom. pres.: 450 bar, max. press.: 500 bar |
| B | High pressure work port, ISO 6162-2, SAE 1“<br>If pressurised - motor runs counter-clockwise<br>Nom. pres.: 450 bar, max. press.: 500 bar |

| | |
|---|---|
| AX | Pressure equalization port |
| BX | |
| T1 | Drain / vent port, ISO 6149, M22x1.5, 15.5 mm deep |
| T2 | Drain / vent port, ISO 6149, M27x2, 19 mm deep |

| | |
|---|---|
| G | Ext. control pressure supply, ISO 6149, M14x1.5, 11.5 mm deep |
| U | Bearing flush port, ISO 6149, M18x1.5, 14.5 mm deep |
| Y1 | Measuring port, ISO 6149, M14x1.5, 11.5 mm deep |
| | |

OVERVIEW
- Key Facts

CONFIGURATION
- Modelcode & Availability

TECHNICAL SPECIFICATION
- General Technical Data
- Operating Parameters
- Controls
- Sensors
- Electric Interfaces
  - Connectors
- Mechanical Interfaces
  - Flanges
  - Shafts
- Hydraulical Interfaces
  - Work Ports
  - Auxiliary Ports
- Functions/Options

AXIAL TWIN PORTS ISO 6162-2
- In combination with ISO 3019-1 / SAE J744 — CMV 60-215
- In combination with ISO 3019-2 metric — CMV 60-215
- In combination with PLUG-IN, SIM. TO ISO 3019-2 — CMV 60-215

SIDE PORTS ISO 6162-2
- In combination with ISO 3019-1 / SAE J744 — CMV 60-215
- In combination with ISO 3019-2 metric — CMV 60-215
- In combination with PLUG-IN, SIM. TO ISO 3019-2 — CMV 60-215

RADIAL TWIN PORTS ISO 6162-2
- In combination with ISO 3019-1 / SAE J744 — CMV 60-215
- In combination with ISO 3019-2 metric — CMV 60-215
- In combination with PLUG-IN, SIM. TO ISO 3019-2 — CMV 60-215


# Technical Specification | Work Ports | Side Ports | ISO METR | **CMV 115**

In the following you will find the technical specifications of the work ports. They are clustered according to the related mounting flange and nominal size. In the section [Model Code & Availability], you can then check the availability of the work ports in combination with additional functions integrated in the port plate housing. So please have a look at model-code [item 10. Port Plate housing] and compile your desired configuration.

## Dimensions - Side view

**E4|XX**

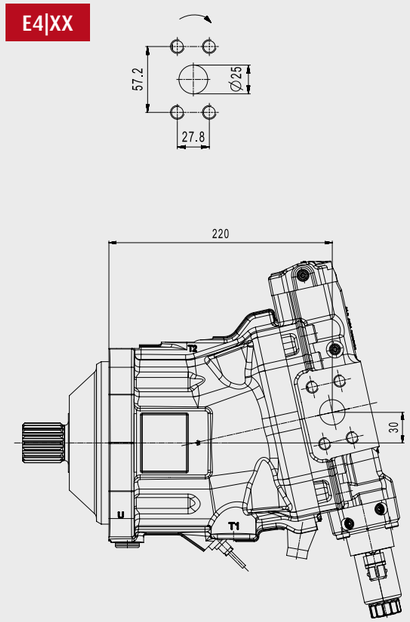


**E6|XX**

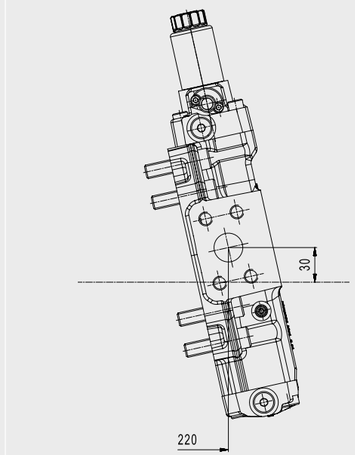


## Dimensions - Back view

**E4|XX**

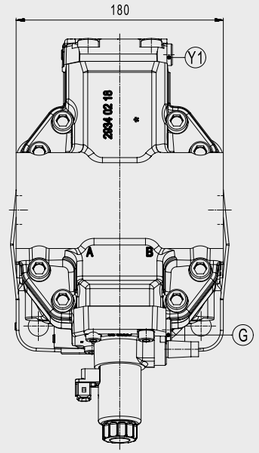


**E6|XX**

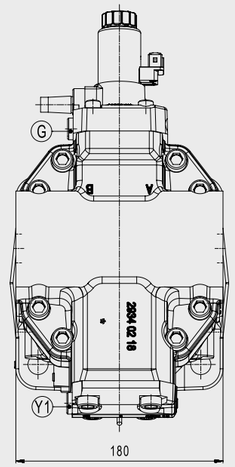


| | |
|---|---|
| E4\|XX | Configuration with negative control (E4 displacement control). The other options shown do not determine the position of the w. ports and are chosen as an example. |
| E6\|XX | Configuration with positive control (E6 displacement control). The other options shown do not determine the position of the w. ports and are chosen as an example. |

| | |
|---|---|
| A | High pressure work port, ISO 6162-2, SAE 1“<br>If pressurised - motor runs clockwise<br>Nom. pres.: 450 bar, max. press.: 500 bar |
| B | High pressure work port, ISO 6162-2, SAE 1“<br>If pressurised - motor runs counter-clockwise<br>Nom. pres.: 450 bar, max. press.: 500 bar |

| | |
|---|---|
| AX | Pressure equalization port |
| BX | |
| T1 | Drain / vent port, ISO 6149, M27x2, 19 mm deep |
| T2 | Drain / vent port, ISO 6149, M33x2, 19 mm deep |

| | |
|---|---|
| G | Ext. control pressure supply, ISO 6149, M14x1.5, 11.5 mm deep |
| U | Bearing flush port, ISO 6149, M18x1.5, 14.5 mm deep |
| Y1 | Measuring port, ISO 6149, M14x1.5, 11.5 mm deep |
| | |

# Technical Specification | Work Ports | Side Ports | ISO METR | **CMV 140**


OVERVIEW
- Key Facts

CONFIGURATION
- Modelcode & Availability

TECHNICAL SPECIFICATION
- General Technical Data
- Operating Parameters
- Controls
- Sensors
- Electric Interfaces
  - Connectors
- Mechanical Interfaces
  - Flanges
  - Shafts
- Hydraulical Interfaces
  - Work Ports
  - Auxiliary Ports
- Functions/Options

AXIAL TWIN PORTS ISO 6162-2
- In combination with ISO 3019-1 / SAE J744 — CMV 60-215
- In combination with ISO 3019-2 metric — CMV 60-215
- In combination with PLUG-IN, SIM. TO ISO 3019-2 — CMV 60-215

SIDE PORTS ISO 6162-2
- In combination with ISO 3019-1 / SAE J744 — CMV 60-215
- In combination with ISO 3019-2 metric — CMV 60-215
- In combination with PLUG-IN, SIM. TO ISO 3019-2 — CMV 60-215

RADIAL TWIN PORTS ISO 6162-2
- In combination with ISO 3019-1 / SAE J744 — CMV 60-215
- In combination with ISO 3019-2 metric — CMV 60-215
- In combination with PLUG-IN, SIM. TO ISO 3019-2 — CMV 60-215


In the following you will find the technical specifications of the work ports. They are clustered according to the related mounting flange and nominal size. In the section [Model Code & Availability], you can then check the availability of the work ports in combination with additional functions integrated in the port plate housing. So please have a look at model-code [item 10. Port Plate housing] and compile your desired configuration.

## Dimensions - Side view

**E4|XX**

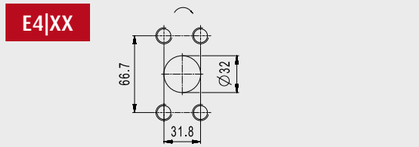


**E6|XX**

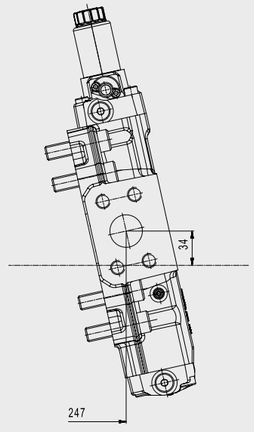


## Dimensions - Back view

**E4|XX**

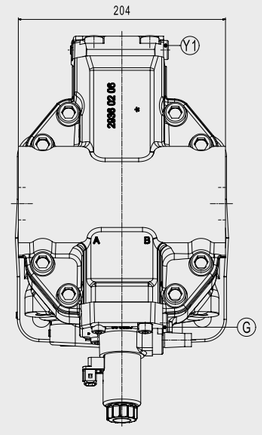


**E6|XX**

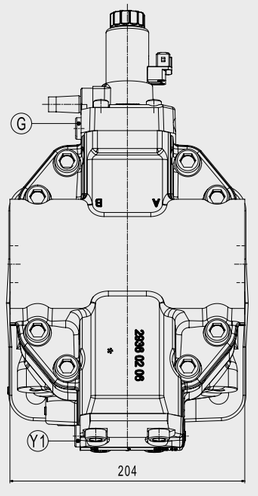


| | |
|---|---|
| E4\|XX | Configuration with negative control (E4 displacement control). The other options shown do not determine the position of the w. ports and are chosen as an example. |
| E6\|XX | Configuration with positive control (E6 displacement control). The other options shown do not determine the position of the w. ports and are chosen as an example. |

| | |
|---|---|
| A | High pressure work port, ISO 6162-2, SAE 1 1/4“<br>If pressurised - motor runs clockwise<br>Nom. pres.: 450 bar, max. press.: 500 bar |
| B | High pressure work port, ISO 6162-2, SAE 1 1/4“<br>If pressurised - motor runs counter-clockwise<br>Nom. pres.: 450 bar, max. press.: 500 bar |

| | |
|---|---|
| AX | Pressure equalization port |
| BX | |
| T1 | Drain / vent port, ISO 6149, M27x2, 19 mm deep |
| T2 | Drain / vent port, ISO 6149, M33x2, 19 mm deep |

| | |
|---|---|
| G | Ext. control pressure supply, ISO 6149, M14x1.5, 11.5 mm deep |
| U | Bearing flush port, ISO 6149, M22x1.5, 15.5 mm deep |
| Y1 | Measuring port, ISO 6149, M14x1.5, 11.5 mm deep |
| | |

# Technical Specification | Work Ports | Side Ports | ISO METR | **CMV 170**


OVERVIEW
- Key Facts

CONFIGURATION
- Modelcode & Availability

TECHNICAL SPECIFICATION
- General Technical Data
- Operating Parameters
- Controls
- Sensors
- Electric Interfaces
  - Connectors
- Mechanical Interfaces
  - Flanges
  - Shafts
- Hydraulical Interfaces
  - Work Ports
  - Auxiliary Ports
- Functions/Options

AXIAL TWIN PORTS ISO 6162-2
- In combination with ISO 3019-1 / SAE J744 — CMV 60-215
- In combination with ISO 3019-2 metric — CMV 60-215
- In combination with PLUG-IN, SIM. TO ISO 3019-2 — CMV 60-215

SIDE PORTS ISO 6162-2
- In combination with ISO 3019-1 / SAE J744 — CMV 60-215
- In combination with ISO 3019-2 metric — CMV 60-215
- In combination with PLUG-IN, SIM. TO ISO 3019-2 — CMV 60-215

RADIAL TWIN PORTS ISO 6162-2
- In combination with ISO 3019-1 / SAE J744 — CMV 60-215
- In combination with ISO 3019-2 metric — CMV 60-215
- In combination with PLUG-IN, SIM. TO ISO 3019-2 — CMV 60-215


In the following you will find the technical specifications of the work ports. They are clustered according to the related mounting flange and nominal size. In the section [Model Code & Availability], you can then check the availability of the work ports in combination with additional functions integrated in the port plate housing. So please have a look at model-code [item 10. Port Plate housing] and compile your desired configuration.

## Dimensions - Side view

**E4|XX**

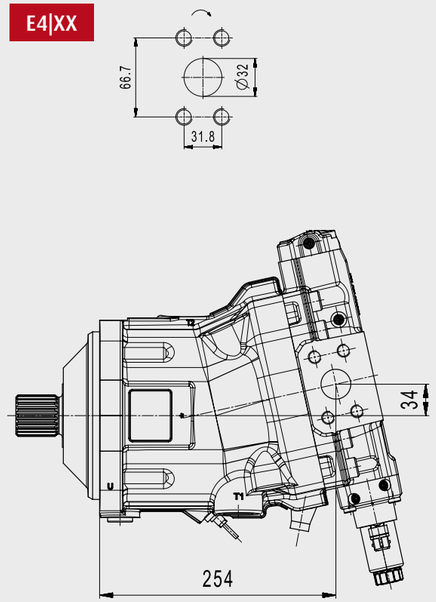


**E6|XX**

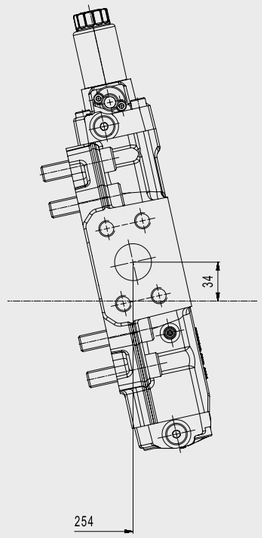


## Dimensions - Back view

**E4|XX**

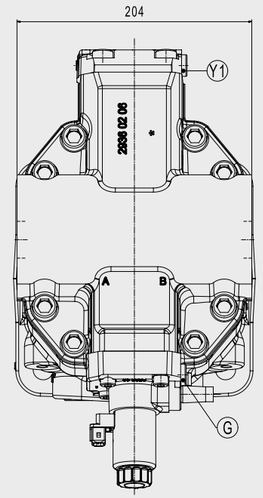


**E6|XX**

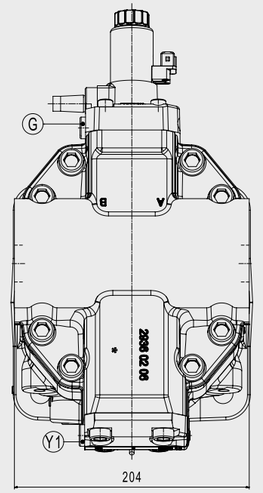


| | |
|---|---|
| E4\|XX | Configuration with negative control (E4 displacement control). The other options shown do not determine the position of the w. ports and are chosen as an example. |
| E6\|XX | Configuration with positive control (E6 displacement control). The other options shown do not determine the position of the w. ports and are chosen as an example. |

| | |
|---|---|
| A | High pressure work port, ISO 6162-2, SAE 1 1/4“<br>If pressurised - motor runs clockwise<br>Nom. pres.: 450 bar, max. press.: 500 bar |
| B | High pressure work port, ISO 6162-2, SAE 1 1/4“<br>If pressurised - motor runs counter-clockwise<br>Nom. pres.: 450 bar, max. press.: 500 bar |

| | |
|---|---|
| AX | Pressure equalization port, ISO 6149, M14x1.5, 11.5 mm deep |
| BX | |
| T1 | Drain / vent port, ISO 6149, M27x2, 19 mm deep |
| T2 | Drain / vent port, ISO 6149, M33x2, 19 mm deep |

| | |
|---|---|
| G | Ext. control pressure supply, ISO 6149, M14x1.5, 11.5 mm deep |
| U | Bearing flush port, ISO 6149, M22x1.5, 15.5 mm deep |
| Y1 | Measuring port, ISO 6149, M14x1.5, 11.5 mm deep |
| | |

# Technical Specification | Work Ports | Side Ports | ISO METR | **CMV 215**

In the following you will find the technical specifications of the work ports. They are clustered according to the related mounting flange and nominal size. In the section [Model Code & Availability], you can then check the availability of the work ports in combination with additional functions integrated in the port plate housing. So please have a look at model-code [item 10. Port Plate housing] and compile your desired configuration.

## Dimensions - Side view

**E4|XX**

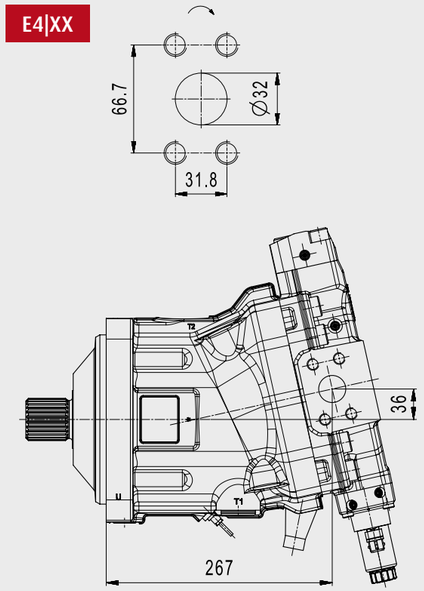


**E6|XX**

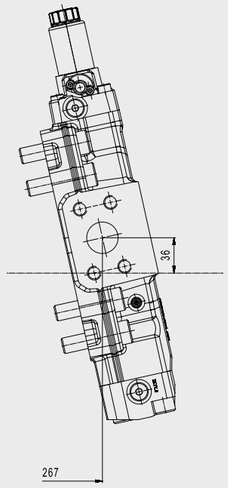


## Dimensions - Back view

**E4|XX**

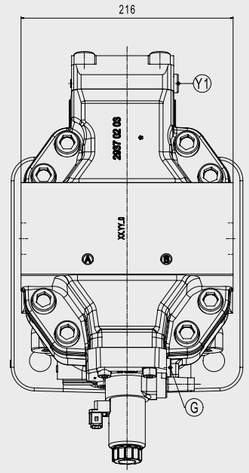


**E6|XX**

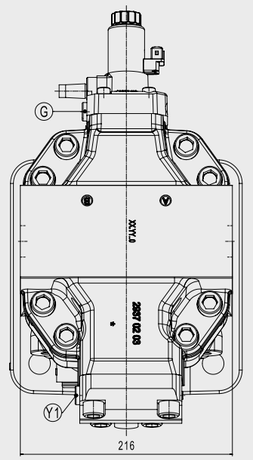


| | |
|---|---|
| E4\|XX | Configuration with negative control (E4 displacement control). The other options shown do not determine the position of the w. ports and are chosen as an example. |
| E6\|XX | Configuration with positive control (E6 displacement control). The other options shown do not determine the position of the w. ports and are chosen as an example. |

| | |
|---|---|
| A | High pressure work port, ISO 6162-2, SAE 1 1/4“<br>If pressurised - motor runs clockwise<br>Nom. pres.: 450 bar, max. press.: 500 bar |
| B | High pressure work port, ISO 6162-2, SAE 1 1/4“<br>If pressurised - motor runs counter-clockwise<br>Nom. pres.: 450 bar, max. press.: 500 bar |

| | |
|---|---|
| AX<br>BX | Pressure equalization port, ISO 6149, M22x1.5, 15.5 mm deep |
| T1 | Drain / vent port, ISO 6149, M33x2, 19 mm deep |
| T2 | Drain / vent port, ISO 6149, M42x2, 19.5 mm deep |

| | |
|---|---|
| G | Ext. control pressure supply, ISO 6149, M14x1.5, 11.5 mm deep |
| U | Bearing flush port, ISO 6149, M22x1.5, 15.5 mm deep |
| Y1 | Measuring port, ISO 6149, M14x1.5, 11.5 mm deep |
| | |

OVERVIEW
Key Facts
CONFIGURATION
Modelcode & Availability
TECHNICAL SPECIFICATION
General Technical Data
Operating Parameters
Controls
Sensors
Electric Interfaces
Connectors
Mechanical Interfaces
Flanges
Shafts
Hydraulical Interfaces
Work Ports
Auxiliary Ports
Functions/Options

AXIAL TWIN PORTS ISO 6162-2
In combination with ISO 3019-1 / SAE J744
CMV 60-215
In combination with ISO 3019-2 metric
CMV 60-215
In combination with PLUG-IN, SIM. TO ISO 3019-2
CMV 60-215

SIDE PORTS ISO 6162-2
In combination with ISO 3019-1 / SAE J744
CMV 60-215
In combination with ISO 3019-2 metric
CMV 60-215
In combination with PLUG-IN, SIM. TO ISO 3019-2
CMV 60-215

RADIAL TWIN PORTS ISO 6162-2
In combination with ISO 3019-1 / SAE J744
CMV 60-215
In combination with ISO 3019-2 metric
CMV 60-215
In combination with PLUG-IN, SIM. TO ISO 3019-2
CMV 60-215

# Technical Specification | Work Ports | Side Ports | PLUG-IN | **CMV 60**

In the following you will find the technical specifications of the work ports. They are clustered according to the related mounting flange and nominal size. In the section [Model Code & Availability], you can then check the availability of the work ports in combination with additional functions integrated in the port plate housing. So please have a look at model-code [item 10. Port Plate housing] and compile your desired configuration.

## Dimensions - Side view

**E4|XX**

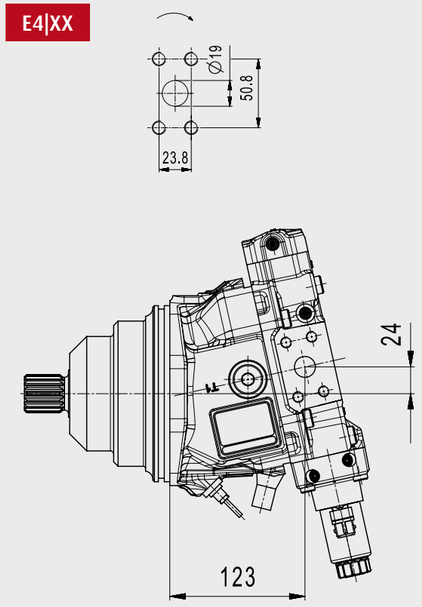


**E6|XX**

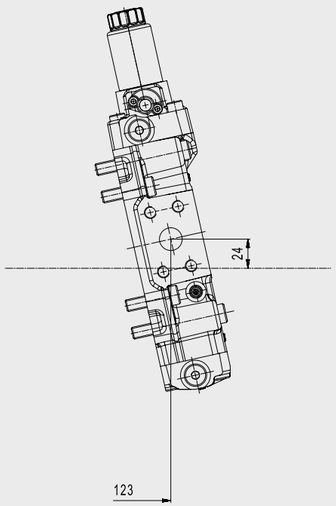


## Dimensions - Back view

**E4|XX**

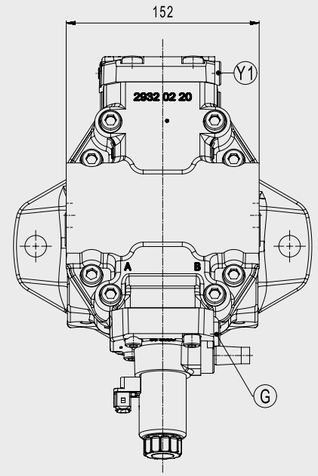


**E6|XX**

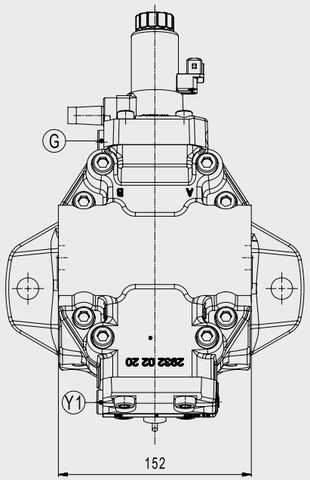


| | |
|---|---|
| E4\|XX | Configuration with negative control (E4 displacement control). The other options shown do not determine the position of the w. ports and are chosen as an example. |
| E6\|XX | Configuration with positive control (E6 displacement control). The other options shown do not determine the position of the w. ports and are chosen as an example. |

| | |
|---|---|
| A | High pressure work port, ISO 6162-2,<br>If pressurised - motor runs clockwise<br>Nom. pres.: 450 bar, max. press.: 500 bar |
| B | High pressure work port, ISO 6162-2,<br>If pressurised - motor runs counter-clockwise<br>Nom. pres.: 450 bar, max. press.: 500 bar |

| | |
|---|---|
| AX | Pressure equalization port |
| BX | |
| T1 | Drain / vent port, ISO 6149 |
| T2 | Drain / vent port, ISO 6149 |

| | |
|---|---|
| G | Ext. control pressure supply, ISO 6149 |
| U | Bearing flush port, ISO 6149 |
| Y1 | Measuring port, ISO 6149 |
| | |

OVERVIEW
- Key Facts

CONFIGURATION
- Modelcode & Availability

TECHNICAL SPECIFICATION
- General Technical Data
- Operating Parameters
- Controls
- Sensors
- Electric Interfaces
  - Connectors
- Mechanical Interfaces
  - Flanges
  - Shafts
- Hydraulical Interfaces
  - Work Ports
  - Auxiliary Ports
- Functions/Options

AXIAL TWIN PORTS ISO 6162-2
- In combination with ISO 3019-1 / SAE J744 — CMV 60-215
- In combination with ISO 3019-2 metric — CMV 60-215
- In combination with PLUG-IN, SIM. TO ISO 3019-2 — CMV 60-215

SIDE PORTS ISO 6162-2
- In combination with ISO 3019-1 / SAE J744 — CMV 60-215
- In combination with ISO 3019-2 metric — CMV 60-215
- In combination with PLUG-IN, SIM. TO ISO 3019-2 — CMV 60-215

RADIAL TWIN PORTS ISO 6162-2
- In combination with ISO 3019-1 / SAE J744 — CMV 60-215
- In combination with ISO 3019-2 metric — CMV 60-215
- In combination with PLUG-IN, SIM. TO ISO 3019-2 — CMV 60-215


# Technical Specification | Work Ports | Side Ports | PLUG-IN | **CMV 85**

In the following you will find the technical specifications of the work ports. They are clustered according to the related mounting flange and nominal size. In the section [Model Code & Availability], you can then check the availability of the work ports in combination with additional functions integrated in the port plate housing. So please have a look at model-code [item 10. Port Plate housing] and compile your desired configuration.

## Dimensions - Side view

**E4|XX**

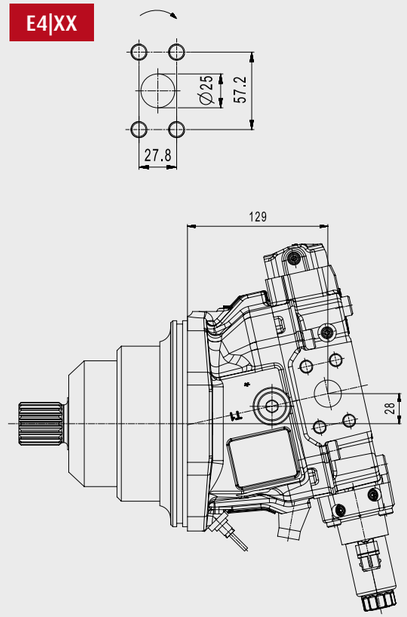


**E6|XX**

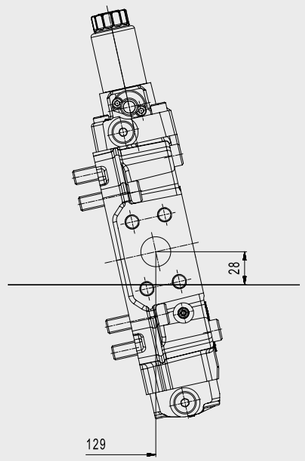


## Dimensions - Back view

**E4|XX**

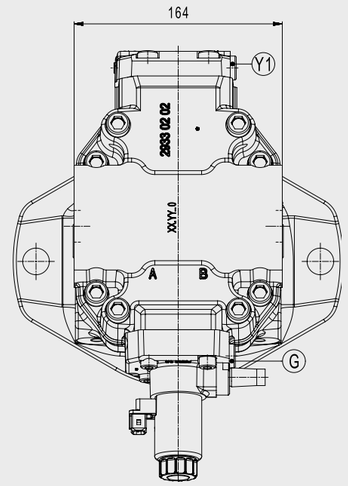


**E6|XX**

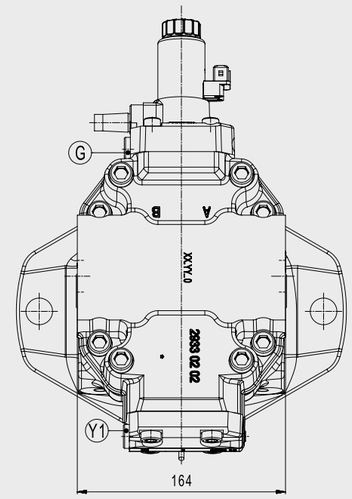


| | |
|---|---|
| E4\|XX | Configuration with negative control (E4 displacement control). The other options shown do not determine the position of the w. ports and are chosen as an example. |
| E6\|XX | Configuration with positive control (E6 displacement control). The other options shown do not determine the position of the w. ports and are chosen as an example. |

| | |
|---|---|
| A | High pressure work port, ISO 6162-2, SAE 1“<br>If pressurised - motor runs clockwise<br>Nom. pres.: 450 bar, max. press.: 500 bar |
| B | High pressure work port, ISO 6162-2, SAE 1“<br>If pressurised - motor runs counter-clockwise<br>Nom. pres.: 450 bar, max. press.: 500 bar |

| | |
|---|---|
| AX | Pressure equalization port |
| BX | |
| T1 | Drain / vent port, ISO 6149, M22x1.5, 15.5 mm deep |
| T2 | Drain / vent port, ISO 6149, M27x2, 19 mm deep |

| | |
|---|---|
| G | Ext. control pressure supply, ISO 6149, M14x1.5, 11.5 mm deep |
| U | Bearing flush port, ISO 6149, M18x1.5, 14.5 mm deep |
| Y1 | Measuring port, ISO 6149, M14x1.5, 11.5 mm deep |
| | |

# Technical Specification | Work Ports | Side Ports | PLUG-IN | **CMV 115**

In the following you will find the technical specifications of the work ports. They are clustered according to the related mounting flange and nominal size. In the section [Model Code & Availability], you can then check the availability of the work ports in combination with additional functions integrated in the port plate housing. So please have a look at model-code [item 10. Port Plate housing] and compile your desired configuration.

## Dimensions - Side view

**E4|XX**

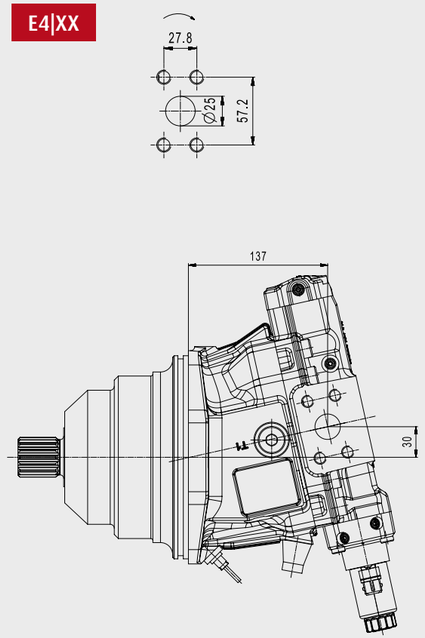


**E6|XX**

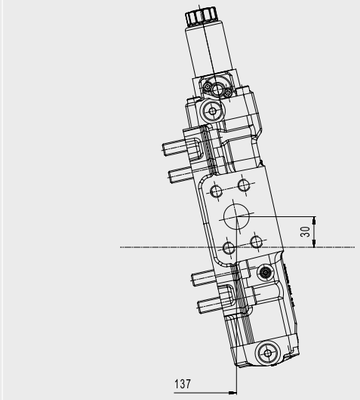


## Dimensions - Back view

**E4|XX**

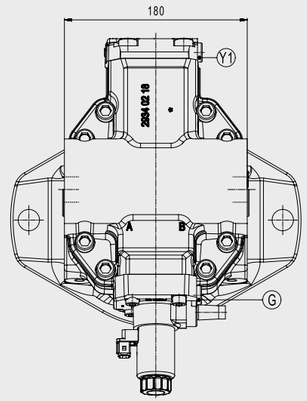


**E6|XX**

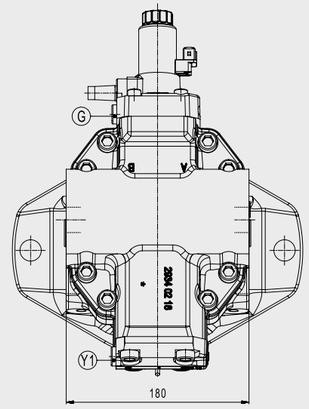


| | | | |
|---|---|---|---|
| E4\|XX | Configuration with negative control (E4 displacement control). The other options shown do not determine the position of the w. ports and are chosen as an example. | A | High pressure work port, ISO 6162-2, SAE 1“<br>If pressurised - motor runs clockwise<br>Nom. pres.: 450 bar, max. press.: 500 bar |
| E6\|XX | Configuration with positive control (E6 displacement control). The other options shown do not determine the position of the w. ports and are chosen as an example. | B | High pressure work port, ISO 6162-2, SAE 1“<br>If pressurised - motor runs counter-clockwise<br>Nom. pres.: 450 bar, max. press.: 500 bar |

| | | | |
|---|---|---|---|
| AX | Pressure equalization port | G | Ext. control pressure supply, ISO 6149, M14x1.5, 11.5 mm deep |
| BX | | U | Bearing flush port, ISO 6149, M18x1.5, 14.5 mm deep |
| T1 | Drain / vent port, ISO 6149, M27x2, 19 mm deep | Y1 | Measuring port, ISO 6149, M14x1.5, 11.5 mm deep |
| T2 | Drain / vent port, ISO 6149, M33x2, 19 mm deep | | |

OVERVIEW
Key Facts
CONFIGURATION
Modelcode & Availability
TECHNICAL SPECIFICATION
General Technical Data
Operating Parameters
Controls
Sensors
Electric Interfaces
Connectors
Mechanical Interfaces
Flanges
Shafts
Hydraulical Interfaces
Work Ports
Auxiliary Ports
Functions/Options

AXIAL TWIN PORTS ISO 6162-2
In combination with ISO 3019-1 / SAE J744
CMV 60-215
In combination with ISO 3019-2 metric
CMV 60-215
In combination with PLUG-IN, SIM. TO ISO 3019-2
CMV 60-215

SIDE PORTS ISO 6162-2
In combination with ISO 3019-1 / SAE J744
CMV 60-215
In combination with ISO 3019-2 metric
CMV 60-215
In combination with PLUG-IN, SIM. TO ISO 3019-2
CMV 60-215

RADIAL TWIN PORTS ISO 6162-2
In combination with ISO 3019-1 / SAE J744
CMV 60-215
In combination with ISO 3019-2 metric
CMV 60-215
In combination with PLUG-IN, SIM. TO ISO 3019-2
CMV 60-215

# Technical Specification | Work Ports | Side Ports | PLUG-IN | **CMV 140**

In the following you will find the technical specifications of the work ports. They are clustered according to the related mounting flange and nominal size. In the section [Model Code & Availability], you can then check the availability of the work ports in combination with additional functions integrated in the port plate housing. So please have a look at model-code [item 10. Port Plate housing] and compile your desired configuration.

## Dimensions - Side view

**E4|XX**

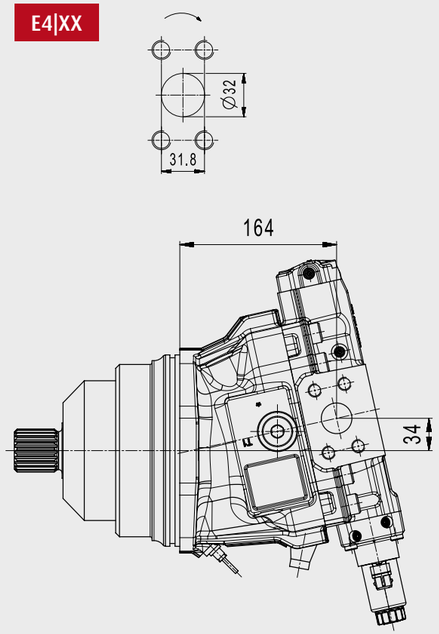


**E6|XX**

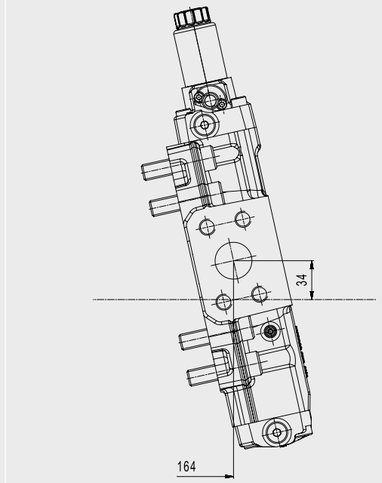


## Dimensions - Back view

**E4|XX**

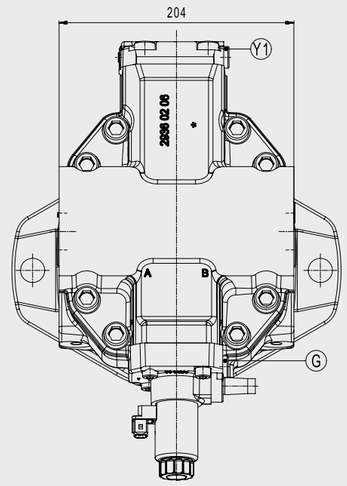


**E6|XX**

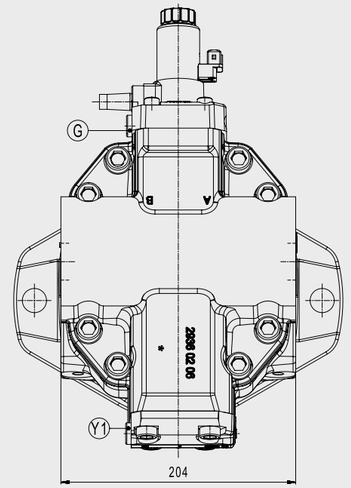


| | |
|---|---|
| E4\|XX | Configuration with negative control (E4 displacement control). The other options shown do not determine the position of the w. ports and are chosen as an example. |
| E6\|XX | Configuration with positive control (E6 displacement control). The other options shown do not determine the position of the w. ports and are chosen as an example. |

| | |
|---|---|
| A | High pressure work port, ISO 6162-2, SAE 1 1/4“<br>If pressurised - motor runs clockwise<br>Nom. pres.: 450 bar, max. press.: 500 bar |
| B | High pressure work port, ISO 6162-2, SAE 1 1/4“<br>If pressurised - motor runs counter-clockwise<br>Nom. pres.: 450 bar, max. press.: 500 bar |

| | |
|---|---|
| AX | Pressure equalization port |
| BX | |
| T1 | Drain / vent port, ISO 6149, M27x2, 19 mm deep |
| T2 | Drain / vent port, ISO 6149, M33x2, 19 mm deep |

| | |
|---|---|
| G | Ext. control pressure supply, ISO 6149, M14x1.5, 11.5 mm deep |
| U | Bearing flush port, ISO 6149, M22x1.5, 15.5 mm deep |
| Y1 | Measuring port, ISO 6149, M14x1.5, 11.5 mm deep |
| | |

OVERVIEW
- Key Facts

CONFIGURATION
- Modelcode & Availability

TECHNICAL SPECIFICATION
- General Technical Data
- Operating Parameters
- Controls
- Sensors
- Electric Interfaces
  - Connectors
- Mechanical Interfaces
  - Flanges
  - Shafts
- Hydraulical Interfaces
  - Work Ports
  - Auxiliary Ports
- Functions/Options

AXIAL TWIN PORTS ISO 6162-2
- In combination with ISO 3019-1 / SAE J744 — CMV 60-215
- In combination with ISO 3019-2 metric — CMV 60-215
- In combination with PLUG-IN, SIM. TO ISO 3019-2 — CMV 60-215

SIDE PORTS ISO 6162-2
- In combination with ISO 3019-1 / SAE J744 — CMV 60-215
- In combination with ISO 3019-2 metric — CMV 60-215
- In combination with PLUG-IN, SIM. TO ISO 3019-2 — CMV 60-215

RADIAL TWIN PORTS ISO 6162-2
- In combination with ISO 3019-1 / SAE J744 — CMV 60-215
- In combination with ISO 3019-2 metric — CMV 60-215
- In combination with PLUG-IN, SIM. TO ISO 3019-2 — CMV 60-215


# Technical Specification | Work Ports | Side Ports | PLUG-IN | **CMV 170**

In the following you will find the technical specifications of the work ports. They are clustered according to the related mounting flange and nominal size. In the section [Model Code & Availability], you can then check the availability of the work ports in combination with additional functions integrated in the port plate housing. So please have a look at model-code [item 10. Port Plate housing] and compile your desired configuration.

## Dimensions - Side view

**E4|XX**

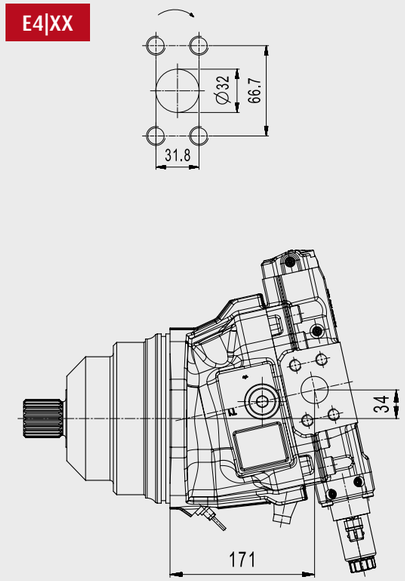


**E6|XX**

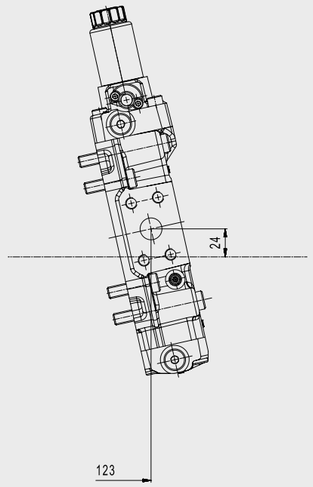


## Dimensions - Back view

**E4|XX**

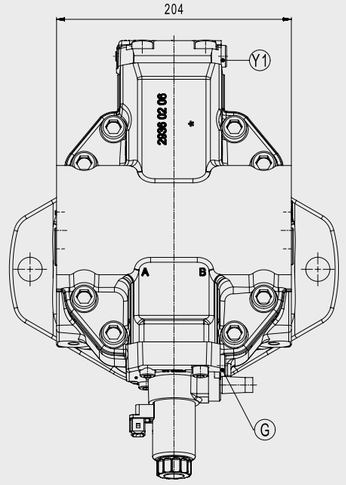


**E6|XX**

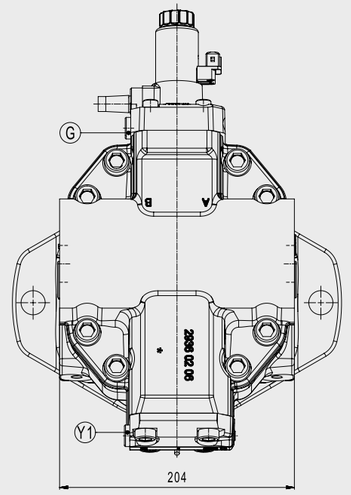


| | |
|---|---|
| E4\|XX | Configuration with negative control (E4 displacement control). The other options shown do not determine the position of the w. ports and are chosen as an example. |
| E6\|XX | Configuration with positive control (E6 displacement control). The other options shown do not determine the position of the w. ports and are chosen as an example. |

| | |
|---|---|
| A | High pressure work port, ISO 6162-2, SAE 1 1/4“<br>If pressurised - motor runs clockwise<br>Nom. pres.: 450 bar, max. press.: 500 bar |
| B | High pressure work port, ISO 6162-2, SAE 1 1/4“<br>If pressurised - motor runs counter-clockwise<br>Nom. pres.: 450 bar, max. press.: 500 bar |

| | |
|---|---|
| AX<br>BX | Pressure equalization port, ISO 6149, M14x1.5, 11.5 mm deep |
| T1 | Drain / vent port, ISO 6149, M27x2, 19 mm deep |
| T2 | Drain / vent port, ISO 6149, M33x2, 19 mm deep |

| | |
|---|---|
| G | Ext. control pressure supply, ISO 6149, M14x1.5, 11.5 mm deep |
| U | Bearing flush port, ISO 6149, M22x1.5, 15.5 mm deep |
| Y1 | Measuring port, ISO 6149, M14x1.5, 11.5 mm deep |
| | |

OVERVIEW
Key Facts
CONFIGURATION
Modelcode & Availability
TECHNICAL SPECIFICATION
General Technical Data
Operating Parameters
Controls
Sensors
Electric Interfaces
Connectors
Mechanical Interfaces
Flanges
Shafts
Hydraulical Interfaces
Work Ports
Auxiliary Ports
Functions/Options

AXIAL TWIN PORTS ISO 6162-2
In combination with ISO 3019-1 / SAE J744
CMV 60-215
In combination with ISO 3019-2 metric
CMV 60-215
In combination with PLUG-IN, SIM. TO ISO 3019-2
CMV 60-215

SIDE PORTS ISO 6162-2
In combination with ISO 3019-1 / SAE J744
CMV 60-215
In combination with ISO 3019-2 metric
CMV 60-215
In combination with PLUG-IN, SIM. TO ISO 3019-2
CMV 60-215

RADIAL TWIN PORTS ISO 6162-2
In combination with ISO 3019-1 / SAE J744
CMV 60-215
In combination with ISO 3019-2 metric
CMV 60-215
In combination with PLUG-IN, SIM. TO ISO 3019-2
CMV 60-215

# Technical Specification | Work Ports | Side Ports | PLUG-IN | **CMV 215**

In the following you will find the technical specifications of the work ports. They are clustered according to the related mounting flange and nominal size. In the section [Model Code & Availability], you can then check the availability of the work ports in combination with additional functions integrated in the port plate housing. So please have a look at model-code [item 10. Port Plate housing] and compile your desired configuration.

## Dimensions - Side view

**E4|XX**

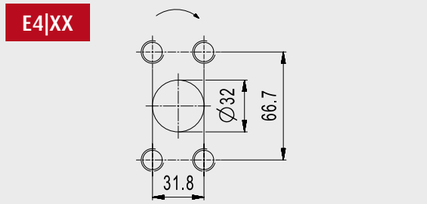


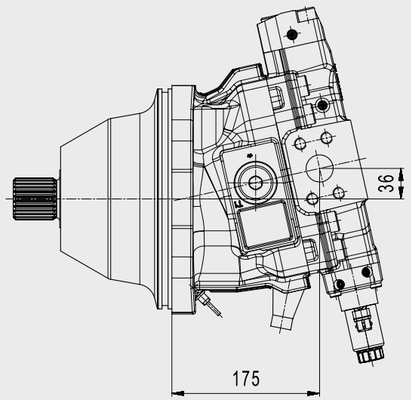


**E6|XX**

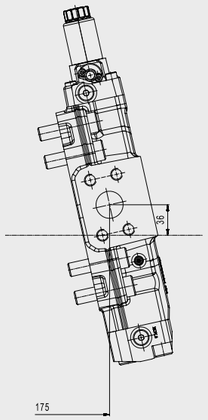


## Dimensions - Back view

**E4|XX**

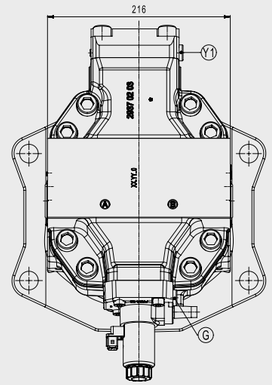


**E6|XX**

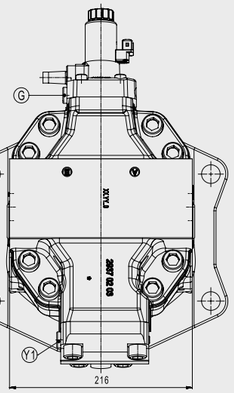


| | |
|---|---|
| E4\|XX | Configuration with negative control (E4 displacement control). The other options shown do not determine the position of the w. ports and are chosen as an example. |
| E6\|XX | Configuration with positive control (E6 displacement control). The other options shown do not determine the position of the w. ports and are chosen as an example. |

| | |
|---|---|
| A | High pressure work port, ISO 6162-2, SAE 1 1/4“<br>If pressurised - motor runs clockwise<br>Nom. pres.: 450 bar, max. press.: 500 bar |
| B | High pressure work port, ISO 6162-2, SAE 1 1/4“<br>If pressurised - motor runs counter-clockwise<br>Nom. pres.: 450 bar, max. press.: 500 bar |

| | |
|---|---|
| AX | Pressure equalization port, ISO 6149, M22x1.5, 15.5 mm deep |
| BX | |
| T1 | Drain / vent port, ISO 6149, M33x2, 19 mm deep |
| T2 | Drain / vent port, ISO 6149, M42x2, 19.5 mm deep |

| | |
|---|---|
| G | Ext. control pressure supply, ISO 6149, M14x1.5, 11.5 mm deep |
| U | Bearing flush port, ISO 6149, M22x1.5, 15.5 mm deep |
| Y1 | Measuring port, ISO 6149, M14x1.5, 11.5 mm deep |
| | |

# Technical Specification | Work Ports | Radial Twin Ports | ISO SAE | **CMV 60**


OVERVIEW
- Key Facts

CONFIGURATION
- Modelcode & Availability

TECHNICAL SPECIFICATION
- General Technical Data
- Operating Parameters
- Controls
- Sensors
- Electric Interfaces
  - Connectors
- Mechanical Interfaces
  - Flanges
  - Shafts
- Hydraulical Interfaces
  - Work Ports
  - Auxiliary Ports
- Functions/Options

AXIAL TWIN PORTS ISO 6162-2
- In combination with ISO 3019-1 / SAE J744 — CMV 60-215
- In combination with ISO 3019-2 metric — CMV 60-215
- In combination with PLUG-IN, SIM. TO ISO 3019-2 — CMV 60-215

SIDE PORTS ISO 6162-2
- In combination with ISO 3019-1 / SAE J744 — CMV 60-215
- In combination with ISO 3019-2 metric — CMV 60-215
- In combination with PLUG-IN, SIM. TO ISO 3019-2 — CMV 60-215

RADIAL TWIN PORTS ISO 6162-2
- In combination with ISO 3019-1 / SAE J744 — CMV 60-215
- In combination with ISO 3019-2 metric — CMV 60-215
- In combination with PLUG-IN, SIM. TO ISO 3019-2 — CMV 60-215


In the following you will find the technical specifications of the work ports. They are clustered according to the related mounting flange and nominal size. In the section [Model Code & Availability], you can then check the availability of the work ports in combination with additional functions integrated in the port plate housing. So please have a look at model-code [item 10. Port Plate housing] and compile your desired configuration.

## Dimensions - Side view

Dimensions upon request

Dimensions upon request

## Dimensions - Back view

Dimensions upon request

Dimensions upon request

# Technical Specification | Work Ports | Radial Twin Ports | ISO SAE | **CMV 85**


OVERVIEW
- Key Facts

CONFIGURATION
- Modelcode & Availability

TECHNICAL SPECIFICATION
- General Technical Data
- Operating Parameters
- Controls
- Sensors
- Electric Interfaces
  - Connectors
- Mechanical Interfaces
  - Flanges
  - Shafts
- Hydraulical Interfaces
  - Work Ports
  - Auxiliary Ports
- Functions/Options

AXIAL TWIN PORTS ISO 6162-2
- In combination with ISO 3019-1 / SAE J744 — CMV 60-215
- In combination with ISO 3019-2 metric — CMV 60-215
- In combination with PLUG-IN, SIM. TO ISO 3019-2 — CMV 60-215

SIDE PORTS ISO 6162-2
- In combination with ISO 3019-1 / SAE J744 — CMV 60-215
- In combination with ISO 3019-2 metric — CMV 60-215
- In combination with PLUG-IN, SIM. TO ISO 3019-2 — CMV 60-215

RADIAL TWIN PORTS ISO 6162-2
- In combination with ISO 3019-1 / SAE J744 — CMV 60-215
- In combination with ISO 3019-2 metric — CMV 60-215
- In combination with PLUG-IN, SIM. TO ISO 3019-2 — CMV 60-215


In the following you will find the technical specifications of the work ports. They are clustered according to the related mounting flange and nominal size. In the section [Model Code & Availability], you can then check the availability of the work ports in combination with additional functions integrated in the port plate housing. So please have a look at model-code [item 10. Port Plate housing] and compile your desired configuration.

## Dimensions - Side view

Dimensions upon request

Dimensions upon request

## Dimensions - Back view

Dimensions upon request

Dimensions upon request

# Technical Specification | Work Ports | Radial Twin Ports | ISO SAE | **CMV 115**


OVERVIEW
- Key Facts

CONFIGURATION
- Modelcode & Availability

TECHNICAL SPECIFICATION
- General Technical Data
- Operating Parameters
- Controls
- Sensors
- Electric Interfaces
  - Connectors
- Mechanical Interfaces
  - Flanges
  - Shafts
- Hydraulical Interfaces
  - Work Ports
  - Auxiliary Ports
- Functions/Options

AXIAL TWIN PORTS ISO 6162-2
- In combination with ISO 3019-1 / SAE J744 — CMV 60-215
- In combination with ISO 3019-2 metric — CMV 60-215
- In combination with PLUG-IN, SIM. TO ISO 3019-2 — CMV 60-215

SIDE PORTS ISO 6162-2
- In combination with ISO 3019-1 / SAE J744 — CMV 60-215
- In combination with ISO 3019-2 metric — CMV 60-215
- In combination with PLUG-IN, SIM. TO ISO 3019-2 — CMV 60-215

RADIAL TWIN PORTS ISO 6162-2
- In combination with ISO 3019-1 / SAE J744 — CMV 60-215
- In combination with ISO 3019-2 metric — CMV 60-215
- In combination with PLUG-IN, SIM. TO ISO 3019-2 — CMV 60-215


In the following you will find the technical specifications of the work ports. They are clustered according to the related mounting flange and nominal size. In the section [Model Code & Availability], you can then check the availability of the work ports in combination with additional functions integrated in the port plate housing. So please have a look at model-code [item 10. Port Plate housing] and compile your desired configuration.

## Dimensions - Side view

Dimensions upon request

Dimensions upon request

## Dimensions - Back view

Dimensions upon request

Dimensions upon request

# Technical Specification | Work Ports | Radial Twin Ports | ISO SAE | **CMV 140**


OVERVIEW
- Key Facts

CONFIGURATION
- Modelcode & Availability

TECHNICAL SPECIFICATION
- General Technical Data
- Operating Parameters
- Controls
- Sensors
- Electric Interfaces
  - Connectors
- Mechanical Interfaces
  - Flanges
  - Shafts
- Hydraulical Interfaces
  - Work Ports
  - Auxiliary Ports
- Functions/Options

AXIAL TWIN PORTS ISO 6162-2
- In combination with ISO 3019-1 / SAE J744 — CMV 60-215
- In combination with ISO 3019-2 metric — CMV 60-215
- In combination with PLUG-IN, SIM. TO ISO 3019-2 — CMV 60-215

SIDE PORTS ISO 6162-2
- In combination with ISO 3019-1 / SAE J744 — CMV 60-215
- In combination with ISO 3019-2 metric — CMV 60-215
- In combination with PLUG-IN, SIM. TO ISO 3019-2 — CMV 60-215

RADIAL TWIN PORTS ISO 6162-2
- In combination with ISO 3019-1 / SAE J744 — CMV 60-215
- In combination with ISO 3019-2 metric — CMV 60-215
- In combination with PLUG-IN, SIM. TO ISO 3019-2 — CMV 60-215


In the following you will find the technical specifications of the work ports. They are clustered according to the related mounting flange and nominal size. In the section [Model Code & Availability], you can then check the availability of the work ports in combination with additional functions integrated in the port plate housing. So please have a look at model-code [item 10. Port Plate housing] and compile your desired configuration.

## Dimensions - Side view

Dimensions upon request

Dimensions upon request

## Dimensions - Back view

Dimensions upon request

Dimensions upon request

# Technical Specification | Work Ports | Radial Twin Ports | ISO SAE | **CMV 170**


OVERVIEW
- Key Facts

CONFIGURATION
- Modelcode & Availability

TECHNICAL SPECIFICATION
- General Technical Data
- Operating Parameters
- Controls
- Sensors
- Electric Interfaces
  - Connectors
- Mechanical Interfaces
  - Flanges
  - Shafts
- Hydraulical Interfaces
  - Work Ports
  - Auxiliary Ports
- Functions/Options

AXIAL TWIN PORTS ISO 6162-2
- In combination with ISO 3019-1 / SAE J744 — CMV 60-215
- In combination with ISO 3019-2 metric — CMV 60-215
- In combination with PLUG-IN, SIM. TO ISO 3019-2 — CMV 60-215

SIDE PORTS ISO 6162-2
- In combination with ISO 3019-1 / SAE J744 — CMV 60-215
- In combination with ISO 3019-2 metric — CMV 60-215
- In combination with PLUG-IN, SIM. TO ISO 3019-2 — CMV 60-215

RADIAL TWIN PORTS ISO 6162-2
- In combination with ISO 3019-1 / SAE J744 — CMV 60-215
- In combination with ISO 3019-2 metric — CMV 60-215
- In combination with PLUG-IN, SIM. TO ISO 3019-2 — CMV 60-215


In the following you will find the technical specifications of the work ports. They are clustered according to the related mounting flange and nominal size. In the section [Model Code & Availability], you can then check the availability of the work ports in combination with additional functions integrated in the port plate housing. So please have a look at model-code [item 10. Port Plate housing] and compile your desired configuration.

## Dimensions - Side view

Dimensions upon request

Dimensions upon request

## Dimensions - Back view

Dimensions upon request

Dimensions upon request

# Technical Specification | Work Ports | Radial Twin Ports | ISO SAE | **CMV 215**


OVERVIEW
- Key Facts

CONFIGURATION
- Modelcode & Availability

TECHNICAL SPECIFICATION
- General Technical Data
- Operating Parameters
- Controls
- Sensors
- Electric Interfaces
  - Connectors
- Mechanical Interfaces
  - Flanges
  - Shafts
- Hydraulical Interfaces
  - Work Ports
  - Auxiliary Ports
- Functions/Options

AXIAL TWIN PORTS ISO 6162-2
- In combination with ISO 3019-1 / SAE J744 — CMV 60-215
- In combination with ISO 3019-2 metric — CMV 60-215
- In combination with PLUG-IN, SIM. TO ISO 3019-2 — CMV 60-215

SIDE PORTS ISO 6162-2
- In combination with ISO 3019-1 / SAE J744 — CMV 60-215
- In combination with ISO 3019-2 metric — CMV 60-215
- In combination with PLUG-IN, SIM. TO ISO 3019-2 — CMV 60-215

RADIAL TWIN PORTS ISO 6162-2
- In combination with ISO 3019-1 / SAE J744 — CMV 60-215
- In combination with ISO 3019-2 metric — CMV 60-215
- In combination with PLUG-IN, SIM. TO ISO 3019-2 — CMV 60-215


In the following you will find the technical specifications of the work ports. They are clustered according to the related mounting flange and nominal size. In the section [Model Code & Availability], you can then check the availability of the work ports in combination with additional functions integrated in the port plate housing. So please have a look at model-code [item 10. Port Plate housing] and compile your desired configuration.

## Dimensions - Side view

Dimensions upon request

Dimensions upon request

## Dimensions - Back view

Dimensions upon request

Dimensions upon request

# Technical Specification | Work Ports | Radial Twin Ports | ISO METR | **CMV 60**


OVERVIEW
- Key Facts

CONFIGURATION
- Modelcode & Availability

TECHNICAL SPECIFICATION
- General Technical Data
- Operating Parameters
- Controls
- Sensors
- Electric Interfaces
  - Connectors
- Mechanical Interfaces
  - Flanges
  - Shafts
- Hydraulical Interfaces
  - Work Ports
  - Auxiliary Ports
- Functions/Options

AXIAL TWIN PORTS ISO 6162-2
- In combination with ISO 3019-1 / SAE J744 — CMV 60-215
- In combination with ISO 3019-2 metric — CMV 60-215
- In combination with PLUG-IN, SIM. TO ISO 3019-2 — CMV 60-215

SIDE PORTS ISO 6162-2
- In combination with ISO 3019-1 / SAE J744 — CMV 60-215
- In combination with ISO 3019-2 metric — CMV 60-215
- In combination with PLUG-IN, SIM. TO ISO 3019-2 — CMV 60-215

RADIAL TWIN PORTS ISO 6162-2
- In combination with ISO 3019-1 / SAE J744 — CMV 60-215
- In combination with ISO 3019-2 metric — CMV 60-215
- In combination with PLUG-IN, SIM. TO ISO 3019-2 — CMV 60-215


In the following you will find the technical specifications of the work ports. They are clustered according to the related mounting flange and nominal size. In the section [Model Code & Availability], you can then check the availability of the work ports in combination with additional functions integrated in the port plate housing. So please have a look at model-code [item 10. Port Plate housing] and compile your desired configuration.

## Dimensions - Side view

Dimensions upon request

Dimensions upon request

## Dimensions - Back view

Dimensions upon request

Dimensions upon request

# Technical Specification | Work Ports | Radial Twin Ports | ISO METR | **CMV 85**


OVERVIEW
- Key Facts

CONFIGURATION
- Modelcode & Availability

TECHNICAL SPECIFICATION
- General Technical Data
- Operating Parameters
- Controls
- Sensors
- Electric Interfaces
  - Connectors
- Mechanical Interfaces
  - Flanges
  - Shafts
- Hydraulical Interfaces
  - Work Ports
  - Auxiliary Ports
- Functions/Options

AXIAL TWIN PORTS ISO 6162-2
- In combination with ISO 3019-1 / SAE J744 — CMV 60-215
- In combination with ISO 3019-2 metric — CMV 60-215
- In combination with PLUG-IN, SIM. TO ISO 3019-2 — CMV 60-215

SIDE PORTS ISO 6162-2
- In combination with ISO 3019-1 / SAE J744 — CMV 60-215
- In combination with ISO 3019-2 metric — CMV 60-215
- In combination with PLUG-IN, SIM. TO ISO 3019-2 — CMV 60-215

RADIAL TWIN PORTS ISO 6162-2
- In combination with ISO 3019-1 / SAE J744 — CMV 60-215
- In combination with ISO 3019-2 metric — CMV 60-215
- In combination with PLUG-IN, SIM. TO ISO 3019-2 — CMV 60-215


In the following you will find the technical specifications of the work ports. They are clustered according to the related mounting flange and nominal size. In the section [Model Code & Availability], you can then check the availability of the work ports in combination with additional functions integrated in the port plate housing. So please have a look at model-code [item 10. Port Plate housing] and compile your desired configuration.

## Dimensions - Side view

Dimensions upon request

Dimensions upon request

## Dimensions - Back view

Dimensions upon request

Dimensions upon request

# Technical Specification | Work Ports | Radial Twin Ports | ISO METR | **CMV 115**


OVERVIEW
- Key Facts

CONFIGURATION
- Modelcode & Availability

TECHNICAL SPECIFICATION
- General Technical Data
- Operating Parameters
- Controls
- Sensors
- Electric Interfaces
  - Connectors
- Mechanical Interfaces
  - Flanges
  - Shafts
- Hydraulical Interfaces
  - Work Ports
  - Auxiliary Ports
- Functions/Options

AXIAL TWIN PORTS ISO 6162-2
- In combination with ISO 3019-1 / SAE J744 — CMV 60-215
- In combination with ISO 3019-2 metric — CMV 60-215
- In combination with PLUG-IN, SIM. TO ISO 3019-2 — CMV 60-215

SIDE PORTS ISO 6162-2
- In combination with ISO 3019-1 / SAE J744 — CMV 60-215
- In combination with ISO 3019-2 metric — CMV 60-215
- In combination with PLUG-IN, SIM. TO ISO 3019-2 — CMV 60-215

RADIAL TWIN PORTS ISO 6162-2
- In combination with ISO 3019-1 / SAE J744 — CMV 60-215
- In combination with ISO 3019-2 metric — CMV 60-215
- In combination with PLUG-IN, SIM. TO ISO 3019-2 — CMV 60-215


In the following you will find the technical specifications of the work ports. They are clustered according to the related mounting flange and nominal size. In the section [Model Code & Availability], you can then check the availability of the work ports in combination with additional functions integrated in the port plate housing. So please have a look at model-code [item 10. Port Plate housing] and compile your desired configuration.

## Dimensions - Side view

Dimensions upon request

Dimensions upon request

## Dimensions - Back view

Dimensions upon request

Dimensions upon request

# Technical Specification | Work Ports | Radial Twin Ports | ISO METR | **CMV 140**


OVERVIEW
- Key Facts

CONFIGURATION
- Modelcode & Availability

TECHNICAL SPECIFICATION
- General Technical Data
- Operating Parameters
- Controls
- Sensors
- Electric Interfaces
  - Connectors
- Mechanical Interfaces
  - Flanges
  - Shafts
- Hydraulical Interfaces
  - Work Ports
  - Auxiliary Ports
- Functions/Options

AXIAL TWIN PORTS ISO 6162-2
- In combination with ISO 3019-1 / SAE J744 — CMV 60-215
- In combination with ISO 3019-2 metric — CMV 60-215
- In combination with PLUG-IN, SIM. TO ISO 3019-2 — CMV 60-215

SIDE PORTS ISO 6162-2
- In combination with ISO 3019-1 / SAE J744 — CMV 60-215
- In combination with ISO 3019-2 metric — CMV 60-215
- In combination with PLUG-IN, SIM. TO ISO 3019-2 — CMV 60-215

RADIAL TWIN PORTS ISO 6162-2
- In combination with ISO 3019-1 / SAE J744 — CMV 60-215
- In combination with ISO 3019-2 metric — CMV 60-215
- In combination with PLUG-IN, SIM. TO ISO 3019-2 — CMV 60-215


In the following you will find the technical specifications of the work ports. They are clustered according to the related mounting flange and nominal size. In the section [Model Code & Availability], you can then check the availability of the work ports in combination with additional functions integrated in the port plate housing. So please have a look at model-code [item 10. Port Plate housing] and compile your desired configuration.

## Dimensions - Side view

Dimensions upon request

Dimensions upon request

## Dimensions - Back view

Dimensions upon request

Dimensions upon request

# Technical Specification | Work Ports | Radial Twin Ports | ISO METR | **CMV 170**


OVERVIEW
- Key Facts

CONFIGURATION
- Modelcode & Availability

TECHNICAL SPECIFICATION
- General Technical Data
- Operating Parameters
- Controls
- Sensors
- Electric Interfaces
  - Connectors
- Mechanical Interfaces
  - Flanges
  - Shafts
- Hydraulical Interfaces
  - Work Ports
  - Auxiliary Ports
- Functions/Options

AXIAL TWIN PORTS ISO 6162-2
- In combination with ISO 3019-1 / SAE J744 — CMV 60-215
- In combination with ISO 3019-2 metric — CMV 60-215
- In combination with PLUG-IN, SIM. TO ISO 3019-2 — CMV 60-215

SIDE PORTS ISO 6162-2
- In combination with ISO 3019-1 / SAE J744 — CMV 60-215
- In combination with ISO 3019-2 metric — CMV 60-215
- In combination with PLUG-IN, SIM. TO ISO 3019-2 — CMV 60-215

RADIAL TWIN PORTS ISO 6162-2
- In combination with ISO 3019-1 / SAE J744 — CMV 60-215
- In combination with ISO 3019-2 metric — CMV 60-215
- In combination with PLUG-IN, SIM. TO ISO 3019-2 — CMV 60-215


In the following you will find the technical specifications of the work ports. They are clustered according to the related mounting flange and nominal size. In the section [Model Code & Availability], you can then check the availability of the work ports in combination with additional functions integrated in the port plate housing. So please have a look at model-code [item 10. Port Plate housing] and compile your desired configuration.

## Dimensions - Side view

Dimensions upon request

Dimensions upon request

## Dimensions - Back view

Dimensions upon request

Dimensions upon request

# Technical Specification | Work Ports | Radial Twin Ports | ISO METR | **CMV 215**


OVERVIEW
- Key Facts

CONFIGURATION
- Modelcode & Availability

TECHNICAL SPECIFICATION
- General Technical Data
- Operating Parameters
- Controls
- Sensors
- Electric Interfaces
  - Connectors
- Mechanical Interfaces
  - Flanges
  - Shafts
- Hydraulical Interfaces
  - Work Ports
  - Auxiliary Ports
- Functions/Options

AXIAL TWIN PORTS ISO 6162-2
- In combination with ISO 3019-1 / SAE J744 — CMV 60-215
- In combination with ISO 3019-2 metric — CMV 60-215
- In combination with PLUG-IN, SIM. TO ISO 3019-2 — CMV 60-215

SIDE PORTS ISO 6162-2
- In combination with ISO 3019-1 / SAE J744 — CMV 60-215
- In combination with ISO 3019-2 metric — CMV 60-215
- In combination with PLUG-IN, SIM. TO ISO 3019-2 — CMV 60-215

RADIAL TWIN PORTS ISO 6162-2
- In combination with ISO 3019-1 / SAE J744 — CMV 60-215
- In combination with ISO 3019-2 metric — CMV 60-215
- In combination with PLUG-IN, SIM. TO ISO 3019-2 — CMV 60-215


In the following you will find the technical specifications of the work ports. They are clustered according to the related mounting flange and nominal size. In the section [Model Code & Availability], you can then check the availability of the work ports in combination with additional functions integrated in the port plate housing. So please have a look at model-code [item 10. Port Plate housing] and compile your desired configuration.

## Dimensions - Side view

Dimensions upon request

Dimensions upon request

## Dimensions - Back view

Dimensions upon request

Dimensions upon request

# Technical Specification | Work Ports | Radial Twin Ports | PLUG-IN | **CMV 60**


OVERVIEW
- Key Facts

CONFIGURATION
- Modelcode & Availability

TECHNICAL SPECIFICATION
- General Technical Data
- Operating Parameters
- Controls
- Sensors
- Electric Interfaces
  - Connectors
- Mechanical Interfaces
  - Flanges
  - Shafts
- Hydraulical Interfaces
  - Work Ports
  - Auxiliary Ports
- Functions/Options

AXIAL TWIN PORTS ISO 6162-2
- In combination with ISO 3019-1 / SAE J744 — CMV 60-215
- In combination with ISO 3019-2 metric — CMV 60-215
- In combination with PLUG-IN, SIM. TO ISO 3019-2 — CMV 60-215

SIDE PORTS ISO 6162-2
- In combination with ISO 3019-1 / SAE J744 — CMV 60-215
- In combination with ISO 3019-2 metric — CMV 60-215
- In combination with PLUG-IN, SIM. TO ISO 3019-2 — CMV 60-215

RADIAL TWIN PORTS ISO 6162-2
- In combination with ISO 3019-1 / SAE J744 — CMV 60-215
- In combination with ISO 3019-2 metric — CMV 60-215
- In combination with PLUG-IN, SIM. TO ISO 3019-2 — CMV 60-215


In the following you will find the technical specifications of the work ports. They are clustered according to the related mounting flange and nominal size. In the section [Model Code & Availability], you can then check the availability of the work ports in combination with additional functions integrated in the port plate housing. So please have a look at model-code [item 10. Port Plate housing] and compile your desired configuration.

## Dimensions - Side view

Dimensions upon request

Dimensions upon request

## Dimensions - Back view

Dimensions upon request

Dimensions upon request

# Technical Specification | Work Ports | Radial Twin Ports | PLUG-IN | **CMV 85**


OVERVIEW
- Key Facts

CONFIGURATION
- Modelcode & Availability

TECHNICAL SPECIFICATION
- General Technical Data
- Operating Parameters
- Controls
- Sensors
- Electric Interfaces
  - Connectors
- Mechanical Interfaces
  - Flanges
  - Shafts
- Hydraulical Interfaces
  - Work Ports
  - Auxiliary Ports
- Functions/Options

AXIAL TWIN PORTS ISO 6162-2
- In combination with ISO 3019-1 / SAE J744 — CMV 60-215
- In combination with ISO 3019-2 metric — CMV 60-215
- In combination with PLUG-IN, SIM. TO ISO 3019-2 — CMV 60-215

SIDE PORTS ISO 6162-2
- In combination with ISO 3019-1 / SAE J744 — CMV 60-215
- In combination with ISO 3019-2 metric — CMV 60-215
- In combination with PLUG-IN, SIM. TO ISO 3019-2 — CMV 60-215

RADIAL TWIN PORTS ISO 6162-2
- In combination with ISO 3019-1 / SAE J744 — CMV 60-215
- In combination with ISO 3019-2 metric — CMV 60-215
- In combination with PLUG-IN, SIM. TO ISO 3019-2 — CMV 60-215


In the following you will find the technical specifications of the work ports. They are clustered according to the related mounting flange and nominal size. In the section [Model Code & Availability], you can then check the availability of the work ports in combination with additional functions integrated in the port plate housing. So please have a look at model-code [item 10. Port Plate housing] and compile your desired configuration.

## Dimensions - Side view

Dimensions upon request

Dimensions upon request

## Dimensions - Back view

Dimensions upon request

Dimensions upon request

# Technical Specification | Work Ports | Radial Twin Ports | PLUG-IN | **CMV 115**


OVERVIEW
- Key Facts

CONFIGURATION
- Modelcode & Availability

TECHNICAL SPECIFICATION
- General Technical Data
- Operating Parameters
- Controls
- Sensors
- Electric Interfaces
  - Connectors
- Mechanical Interfaces
  - Flanges
  - Shafts
- Hydraulical Interfaces
  - Work Ports
  - Auxiliary Ports
- Functions/Options

AXIAL TWIN PORTS ISO 6162-2
- In combination with ISO 3019-1 / SAE J744 — CMV 60-215
- In combination with ISO 3019-2 metric — CMV 60-215
- In combination with PLUG-IN, SIM. TO ISO 3019-2 — CMV 60-215

SIDE PORTS ISO 6162-2
- In combination with ISO 3019-1 / SAE J744 — CMV 60-215
- In combination with ISO 3019-2 metric — CMV 60-215
- In combination with PLUG-IN, SIM. TO ISO 3019-2 — CMV 60-215

RADIAL TWIN PORTS ISO 6162-2
- In combination with ISO 3019-1 / SAE J744 — CMV 60-215
- In combination with ISO 3019-2 metric — CMV 60-215
- In combination with PLUG-IN, SIM. TO ISO 3019-2 — CMV 60-215


In the following you will find the technical specifications of the work ports. They are clustered according to the related mounting flange and nominal size. In the section [Model Code & Availability], you can then check the availability of the work ports in combination with additional functions integrated in the port plate housing. So please have a look at model-code [item 10. Port Plate housing] and compile your desired configuration.

## Dimensions - Side view

Dimensions upon request

Dimensions upon request

## Dimensions - Back view

Dimensions upon request

Dimensions upon request

# Technical Specification | Work Ports | Radial Twin Ports | PLUG-IN | **CMV 140**


OVERVIEW
- Key Facts

CONFIGURATION
- Modelcode & Availability

TECHNICAL SPECIFICATION
- General Technical Data
- Operating Parameters
- Controls
- Sensors
- Electric Interfaces
  - Connectors
- Mechanical Interfaces
  - Flanges
  - Shafts
- Hydraulical Interfaces
  - Work Ports
  - Auxiliary Ports
- Functions/Options

AXIAL TWIN PORTS ISO 6162-2
- In combination with ISO 3019-1 / SAE J744 — CMV 60-215
- In combination with ISO 3019-2 metric — CMV 60-215
- In combination with PLUG-IN, SIM. TO ISO 3019-2 — CMV 60-215

SIDE PORTS ISO 6162-2
- In combination with ISO 3019-1 / SAE J744 — CMV 60-215
- In combination with ISO 3019-2 metric — CMV 60-215
- In combination with PLUG-IN, SIM. TO ISO 3019-2 — CMV 60-215

RADIAL TWIN PORTS ISO 6162-2
- In combination with ISO 3019-1 / SAE J744 — CMV 60-215
- In combination with ISO 3019-2 metric — CMV 60-215
- In combination with PLUG-IN, SIM. TO ISO 3019-2 — CMV 60-215


In the following you will find the technical specifications of the work ports. They are clustered according to the related mounting flange and nominal size. In the section [Model Code & Availability], you can then check the availability of the work ports in combination with additional functions integrated in the port plate housing. So please have a look at model-code [item 10. Port Plate housing] and compile your desired configuration.

## Dimensions - Side view

Dimensions upon request

Dimensions upon request

## Dimensions - Back view

Dimensions upon request

Dimensions upon request

# Technical Specification | Work Ports | Radial Twin Ports | PLUG-IN | **CMV 170**


OVERVIEW
- Key Facts

CONFIGURATION
- Modelcode & Availability

TECHNICAL SPECIFICATION
- General Technical Data
- Operating Parameters
- Controls
- Sensors
- Electric Interfaces
  - Connectors
- Mechanical Interfaces
  - Flanges
  - Shafts
- Hydraulical Interfaces
  - Work Ports
  - Auxiliary Ports
- Functions/Options

AXIAL TWIN PORTS ISO 6162-2
- In combination with ISO 3019-1 / SAE J744 — CMV 60-215
- In combination with ISO 3019-2 metric — CMV 60-215
- In combination with PLUG-IN, SIM. TO ISO 3019-2 — CMV 60-215

SIDE PORTS ISO 6162-2
- In combination with ISO 3019-1 / SAE J744 — CMV 60-215
- In combination with ISO 3019-2 metric — CMV 60-215
- In combination with PLUG-IN, SIM. TO ISO 3019-2 — CMV 60-215

RADIAL TWIN PORTS ISO 6162-2
- In combination with ISO 3019-1 / SAE J744 — CMV 60-215
- In combination with ISO 3019-2 metric — CMV 60-215
- In combination with PLUG-IN, SIM. TO ISO 3019-2 — CMV 60-215


In the following you will find the technical specifications of the work ports. They are clustered according to the related mounting flange and nominal size. In the section [Model Code & Availability], you can then check the availability of the work ports in combination with additional functions integrated in the port plate housing. So please have a look at model-code [item 10. Port Plate housing] and compile your desired configuration.

## Dimensions - Side view

Dimensions upon request

Dimensions upon request

## Dimensions - Back view

Dimensions upon request

Dimensions upon request

# Technical Specification | Work Ports | Radial Twin Ports | PLUG-IN | **CMV 215**


OVERVIEW
- Key Facts

CONFIGURATION
- Modelcode & Availability

TECHNICAL SPECIFICATION
- General Technical Data
- Operating Parameters
- Controls
- Sensors
- Electric Interfaces
  - Connectors
- Mechanical Interfaces
  - Flanges
  - Shafts
- Hydraulical Interfaces
  - Work Ports
  - Auxiliary Ports
- Functions/Options

AXIAL TWIN PORTS ISO 6162-2
- In combination with ISO 3019-1 / SAE J744 — CMV 60-215
- In combination with ISO 3019-2 metric — CMV 60-215
- In combination with PLUG-IN, SIM. TO ISO 3019-2 — CMV 60-215

SIDE PORTS ISO 6162-2
- In combination with ISO 3019-1 / SAE J744 — CMV 60-215
- In combination with ISO 3019-2 metric — CMV 60-215
- In combination with PLUG-IN, SIM. TO ISO 3019-2 — CMV 60-215

RADIAL TWIN PORTS ISO 6162-2
- In combination with ISO 3019-1 / SAE J744 — CMV 60-215
- In combination with ISO 3019-2 metric — CMV 60-215
- In combination with PLUG-IN, SIM. TO ISO 3019-2 — CMV 60-215


In the following you will find the technical specifications of the work ports. They are clustered according to the related mounting flange and nominal size. In the section [Model Code & Availability], you can then check the availability of the work ports in combination with additional functions integrated in the portplate housing. So please have a look at model-code [item 10. Port Plate housing] and compile your desired configuration.

## Dimensions - Side view

Dimensions upon request

Dimensions upon request

## Dimensions - Back view

Dimensions upon request

Dimensions upon request

# Technical Specification | Functions/Options | Flushing | ISO SAE | **CMV 60-215**


OVERVIEW
- Key Facts

CONFIGURATION
- Modelcode & Availability

TECHNICAL SPECIFICATION
- General Technical Data
- Operating Parameters
- Controls
- Sensors
- Electric Interfaces
  - Connectors
- Mechanical Interfaces
  - Flanges
  - Shafts
- Hydraulical Interfaces
  - Work Ports
  - Auxiliary Ports
- Functions/Options

Flushing
- In combination with ISO 3019-1 / SAE J744 — CMV 60-215
- In combination with ISO 3019-2 metric — CMV 60-215
- In combination with PLUG-IN, SIM. TO ISO 3019-2 — CMV 60-215


In the following you will find the technical specifications of the flushing function. They are clustered according to the related mounting flange and nominal size. First get an overview of the table data showing pressure and flow data of this function. Beyond that you will find the dimensions of the related components in combination with each mounting flange and nominal size. In the section [Model Code & Availability], you can then check the availability of the flushing function in combination with additional functions integrated in the port plate housing. So please have a look at modelcode [item 10. Port Plate housing] and compile your desired configuration.

The flushing function is used in closed circuit applications. Its primary function is to remove heat from the hydraulic circuit by flushing the housing. It also ensures the minimum charge pressure. In order to achieve this, the pressure fluid is discharged from the respective low-pressure side into the motor housing. Along with the leakage, this is discharged into the tank. The extracted pressure fluid is replaced with cooled pressure fluid by charge pump. The flushing function is mounted on the port plate housing.

| Specification | | | | | | | |
|---|---|---|---|---|---|---|---|
| Nominal size | | | | | 60 | 85 | 115 | 140 | 170 | 215 |
| Pressure | Opening pressure | Flushing relief valve | | bar | 13 | 13 | 13 | 13 | 13 | 13 |
| | Switching pressure | Shuttle valve | | | 10 | 10 | 10 | 10 | 10 | 10 |
| Flow | Flushing flow | at 20 bar on low pressure side and viscosity of approx. 15 cst | | l/min | 6 to 25 (optional) | | | | | |
| | | | | | | | | | | |
| | | | | | | | | | | |
| | | | | | | | | | | |
| | | | | | | | | | | |
| | | | | | | | | | | |
| | | | | | | | | | | |
| | | | | | | | | | | |
| | | | | | | | | | | |
| | | | | | | | | | | |
| | | | | | | | | | | |

# Technical Specification | Functions/Options | Flushing | ISO SAE | **CMV 60**


OVERVIEW
- Key Facts

CONFIGURATION
- Modelcode & Availability

TECHNICAL SPECIFICATION
- General Technical Data
- Operating Parameters
- Controls
- Sensors
- Electric Interfaces
  - Connectors
- Mechanical Interfaces
  - Flanges
  - Shafts
- Hydraulical Interfaces
  - Work Ports
  - Auxiliary Ports
- Functions/Options

Flushing
- In combination with ISO 3019-1 / SAE J744 — CMV 60-215
- In combination with ISO 3019-2 metric — CMV 60-215
- In combination with PLUG-IN, SIM. TO ISO 3019-2 — CMV 60-215


In the following you will find the technical specifications of the flushing function. They are clustered according to the related mounting flange and nominal size. First get an overview of the table data showing pressure and flow data of this function. Beyond that you will find the dimensions of the related components in combination with each mounting flange and nominal size. In the section [Model Code & Availability], you can then check the availability of the flushing function in combination with additional functions integrated in the port plate housing. So please have a look at modelcode [item 10. Port Plate housing] and compile your desired configuration.

## Dimensions - Side view

**MAX|NO**

Dimensions
upon request

**MAX|FL**

Dimensions
upon request

| | | | |
|---|---|---|---|
| MAX\|NO | Examle configuration with control considering default position $Vg_{max}$. Flushing function is not provided. | | |
| MAX\|FL | Examle configuration with control considering default position $Vg_{max}$. Flushing function is provided. | | |

## Dimensions - Side view

**MIN|NO**

Dimensions
upon request

**MIN|FL**

Dimensions
upon request

| | | | |
|---|---|---|---|
| MAX\|NO | Examle configuration with control considering default position $Vg_{min}$. Flushing function is not provided. | | |
| MAX\|FL | Examle configuration with control considering default position $Vg_{min}$. Flushing function is provided. | | |

OVERVIEW
Key Facts
CONFIGURATION
Modelcode & Availability
TECHNICAL SPECIFICATION
General Technical Data
Operating Parameters
Controls
Sensors
Electric Interfaces
Connectors
Mechanical Interfaces
Flanges
Shafts
Hydraulical Interfaces
Work Ports
Auxiliary Ports
Functions/Options

Flushing
In combination with ISO 3019-1 / SAE J744
CMV 60-215
In combination with ISO 3019-2 metric
CMV 60-215
In combination with PLUG-IN, SIM. TO ISO 3019-2
CMV 60-215

# Technical Specification | Functions/Options | Flushing | ISO SAE | **CMV 85**

In the following you will find the technical specifications of the flushing function. They are clustered according to the related mounting flange and nominal size. First get an overview of the table data showing pressure and flow data of this function. Beyond that you will find the dimensions of the related components in combination with each mounting flange and nominal size. In the section [Model Code & Availability], you can then check the availability of the flushing function in combination with additional functions integrated in the port plate housing. So please have a look at modelcode [item 10. Port Plate housing] and compile your desired configuration.

## Dimensions - Side view

**MAX|NO**

Dimensions
upon request

**MAX|FL**

Dimensions
upon request

| | | | |
|---|---|---|---|
| MAX\|NO | Examle configuration with control considering default position $Vg_{max}$. Flushing function is not provided. | | |
| MAX\|FL | Examle configuration with control considering default position $Vg_{max}$. Flushing function is provided. | | |

## Dimensions - Side view

**MIN|NO**

Dimensions
upon request

**MIN|FL**

Dimensions
upon request

| | | | |
|---|---|---|---|
| MAX\|NO | Examle configuration with control considering default position $Vg_{min}$. Flushing function is not provided. | | |
| MAX\|FL | Examle configuration with control considering default position $Vg_{min}$. Flushing function is provided. | | |

# Technical Specification | Functions/Options | Flushing | ISO SAE | **CMV 115**


OVERVIEW
- Key Facts

CONFIGURATION
- Modelcode & Availability

TECHNICAL SPECIFICATION
- General Technical Data
- Operating Parameters
- Controls
- Sensors
- Electric Interfaces
  - Connectors
- Mechanical Interfaces
  - Flanges
  - Shafts
- Hydraulical Interfaces
  - Work Ports
  - Auxiliary Ports
- Functions/Options

Flushing
- In combination with ISO 3019-1 / SAE J744
  - CMV 60-215
- In combination with ISO 3019-2 metric
  - CMV 60-215
- In combination with PLUG-IN, SIM. TO ISO 3019-2
  - CMV 60-215


In the following you will find the technical specifications of the flushing function. They are clustered according to the related mounting flange and nominal size. First get an overview of the table data showing pressure and flow data of this function. Beyond that you will find the dimensions of the related components in combination with each mounting flange and nominal size. In the section [Model Code & Availability], you can then check the availability of the flushing function in combination with additional functions integrated in the port plate housing. So please have a look at modelcode [item 10. Port Plate housing] and compile your desired configuration.

## Dimensions - Side view

**MAX|NO**

Dimensions upon request

**MAX|FL**

Dimensions upon request

| | | | |
|---|---|---|---|
| MAX\|NO | Examle configuration with control considering default position $Vg_{max}$. Flushing function is not provided. | | |
| MAX\|FL | Examle configuration with control considering default position $Vg_{max}$. Flushing function is provided. | | |

## Dimensions - Side view

**MIN|NO**

Dimensions upon request

**MIN|FL**

Dimensions upon request

| | | | |
|---|---|---|---|
| MAX\|NO | Examle configuration with control considering default position $Vg_{min}$. Flushing function is not provided. | | |
| MAX\|FL | Examle configuration with control considering default position $Vg_{min}$. Flushing function is provided. | | |

OVERVIEW
Key Facts
CONFIGURATION
Modelcode & Availability
TECHNICAL SPECIFICATION
General Technical Data
Operating Parameters
Controls
Sensors
Electric Interfaces
Connectors
Mechanical Interfaces
Flanges
Shafts
Hydraulical Interfaces
Work Ports
Auxiliary Ports
Functions/Options

Flushing
In combination with ISO 3019-1 / SAE J744
CMV 60-215
In combination with ISO 3019-2 metric
CMV 60-215
In combination with PLUG-IN, SIM. TO ISO 3019-2
CMV 60-215

# Technical Specification | Functions/Options | Flushing | ISO SAE | **CMV 140**

In the following you will find the technical specifications of the flushing function. They are clustered according to the related mounting flange and nominal size. First get an overview of the table data showing pressure and flow data of this function. Beyond that you will find the dimensions of the related components in combination with each mounting flange and nominal size. In the section [Model Code & Availability], you can then check the availability of the flushing function in combination with additional functions integrated in the port plate housing. So please have a look at modelcode [item 10. Port Plate housing] and compile your desired configuration.

## Dimensions - Side view

**MAX|NO**

Dimensions
upon request

**MAX|FL**

Dimensions
upon request

| | | | |
|---|---|---|---|
| MAX\|NO | Examle configuration with control considering default position $Vg_{max}$. Flushing function is not provided. | | |
| MAX\|FL | Examle configuration with control considering default position $Vg_{max}$. Flushing function is provided. | | |

## Dimensions - Side view

**MIN|NO**

Dimensions
upon request

**MIN|FL**

Dimensions
upon request

| | | | |
|---|---|---|---|
| MAX\|NO | Examle configuration with control considering default position $Vg_{min}$. Flushing function is not provided. | | |
| MAX\|FL | Examle configuration with control considering default position $Vg_{min}$. Flushing function is provided. | | |

# Technical Specification | Functions/Options | Flushing | ISO SAE | **CMV 170**


OVERVIEW
- Key Facts

CONFIGURATION
- Modelcode & Availability

TECHNICAL SPECIFICATION
- General Technical Data
- Operating Parameters
- Controls
- Sensors
- Electric Interfaces
  - Connectors
- Mechanical Interfaces
  - Flanges
  - Shafts
- Hydraulical Interfaces
  - Work Ports
  - Auxiliary Ports
- Functions/Options

Flushing
- In combination with ISO 3019-1 / SAE J744 — CMV 60-215
- In combination with ISO 3019-2 metric — CMV 60-215
- In combination with PLUG-IN, SIM. TO ISO 3019-2 — CMV 60-215


In the following you will find the technical specifications of the flushing function. They are clustered according to the related mounting flange and nominal size. First get an overview of the table data showing pressure and flow data of this function. Beyond that you will find the dimensions of the related components in combination with each mounting flange and nominal size. In the section [Model Code & Availability], you can then check the availability of the flushing function in combination with additional functions integrated in the port plate housing. So please have a look at modelcode [item 10. Port Plate housing] and compile your desired configuration.

## Dimensions - Side view

**MAX|NO**

Dimensions
upon request

**MAX|FL**

Dimensions
upon request

| | | | |
|---|---|---|---|
| MAX\|NO | Examle configuration with control considering default position $Vg_{max}$. Flushing function is not provided. | | |
| MAX\|FL | Examle configuration with control considering default position $Vg_{max}$. Flushing function is provided. | | |

## Dimensions - Side view

**MIN|NO**

Dimensions
upon request

**MIN|FL**

Dimensions
upon request

| | | | |
|---|---|---|---|
| MAX\|NO | Examle configuration with control considering default position $Vg_{min}$. Flushing function is not provided. | | |
| MAX\|FL | Examle configuration with control considering default position $Vg_{min}$. Flushing function is provided. | | |

# Technical Specification | Functions/Options | Flushing | ISO SAE | **CMV 215**


OVERVIEW
- Key Facts

CONFIGURATION
- Modelcode & Availability

TECHNICAL SPECIFICATION
- General Technical Data
- Operating Parameters
- Controls
- Sensors
- Electric Interfaces
  - Connectors
- Mechanical Interfaces
  - Flanges
  - Shafts
- Hydraulical Interfaces
  - Work Ports
  - Auxiliary Ports
- Functions/Options

Flushing
- In combination with ISO 3019-1 / SAE J744
  - CMV 60-215
- In combination with ISO 3019-2 metric
  - CMV 60-215
- In combination with PLUG-IN, SIM. TO ISO 3019-2
  - CMV 60-215


In the following you will find the technical specifications of the flushing function. They are clustered according to the related mounting flange and nominal size. First get an overview of the table data showing pressure and flow data of this function. Beyond that you will find the dimensions of the related components in combination with each mounting flange and nominal size. In the section [Model Code & Availability], you can then check the availability of the flushing function in combination with additional functions integrated in the port plate housing. So please have a look at modelcode [item 10. Port Plate housing] and compile your desired configuration.

## Dimensions - Side view

**MAX|NO**

Dimensions
upon request

**MAX|FL**

Dimensions
upon request

| | | | |
|---|---|---|---|
| MAX\|NO | Examle configuration with control considering default position $Vg_{max}$. Flushing function is not provided. | | |
| MAX\|FL | Examle configuration with control considering default position $Vg_{max}$. Flushing function is provided. | | |

## Dimensions - Side view

**MIN|NO**

Dimensions
upon request

**MIN|FL**

Dimensions
upon request

| | | | |
|---|---|---|---|
| MAX\|NO | Examle configuration with control considering default position $Vg_{min}$. Flushing function is not provided. | | |
| MAX\|FL | Examle configuration with control considering default position $Vg_{min}$. Flushing function is provided. | | |

# Technical Specification | Functions/Options | Flushing | ISO SAE | **CMV 60-215**


OVERVIEW
- Key Facts

CONFIGURATION
- Modelcode & Availability

TECHNICAL SPECIFICATION
- General Technical Data
- Operating Parameters
- Controls
- Sensors
- Electric Interfaces
  - Connectors
- Mechanical Interfaces
  - Flanges
  - Shafts
- Hydraulical Interfaces
  - Work Ports
  - Auxiliary Ports
- Functions/Options

Flushing
- In combination with ISO 3019-1 / SAE J744 — CMV 60-215
- In combination with ISO 3019-2 metric — CMV 60-215
- In combination with PLUG-IN, SIM. TO ISO 3019-2 — CMV 60-215


In the following you will find the technical specifications of the flushing function. They are clustered according to the related mounting flange and nominal size. First get an overview of the table data showing pressure and flow data of this function. Beyond that you will find the dimensions of the related components in combination with each mounting flange and nominal size. In the section [Model Code & Availability], you can then check the availability of the flushing function in combination with additional functions integrated in the port plate housing. So please have a look at modelcode [item 10. Port Plate housing] and compile your desired configuration.

## Hydraulic Diagram (Configuration Examples)

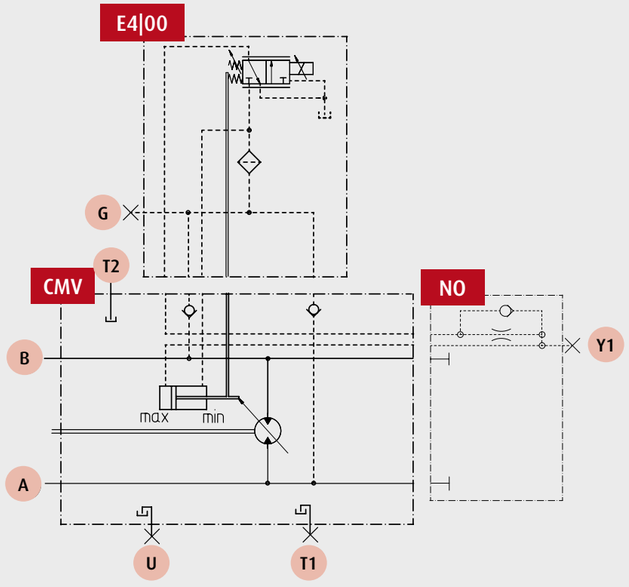


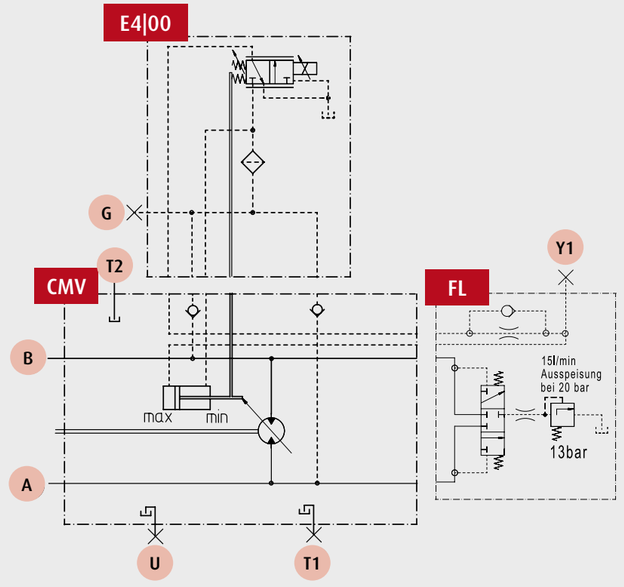


| | | | |
|---|---|---|---|
| CMV | Basic motor (without Controls/Functions/Options) | FL | Cover that provides flushing function |
| E4\|00 | Displ. Contrl. E4 + Press. Contrl. 00 | | |
| NO | Blind cover that closes the interface of the portplate and does not provide flushing function | A | High pressure work port |
| | | B | High pressure work port |

| | | | |
|---|---|---|---|
| AX | Pressure equalization port | G | Ext. control pressure supply |
| BX | | U | Bearing flush port |
| T1 | Drain / vent port | Y1 | Measuring port |
| T2 | | | |

# Technical Specification | Functions/Options | Flushing | ISO METR | **CMV 60-215**


OVERVIEW
- Key Facts

CONFIGURATION
- Modelcode & Availability

TECHNICAL SPECIFICATION
- General Technical Data
- Operating Parameters
- Controls
- Sensors
- Electric Interfaces
  - Connectors
- Mechanical Interfaces
  - Flanges
  - Shafts
- Hydraulical Interfaces
  - Work Ports
  - Auxiliary Ports
- Functions/Options

Flushing
- In combination with ISO 3019-1 / SAE J744 — CMV 60-215
- In combination with ISO 3019-2 metric — CMV 60-215
- In combination with PLUG-IN, SIM. TO ISO 3019-2 — CMV 60-215


In the following you will find the technical specifications of the flushing function. They are clustered according to the related mounting flange and nominal size. First get an overview of the table data showing pressure and flow data of this function. Beyond that you will find the dimensions of the related components in combination with each mounting flange and nominal size. In the section [Model Code & Availability], you can then check the availability of the flushing function in combination with additional functions integrated in the port plate housing. So please have a look at modelcode [item 10. Port Plate housing] and compile your desired configuration.

The flushing function is used in closed circuit applications. Its primary function is to remove heat from the hydraulic circuit by flushing the housing. It also ensures the minimum charge pressure. In order to achieve this, the pressure fluid is discharged from the respective low-pressure side into the motor housing. Along with the leakage, this is discharged into the tank. The extracted pressure fluid is replaced with cooled pressure fluid by charge pump. The flushing function is mounted on the port plate housing.

| Specification | | | | | | | |
|---|---|---|---|---|---|---|---|
| Nominal size | | | | | 60 | 85 | 115 | 140 | 170 | 215 |
| Pressure | Opening pressure | Flushing relief valve | | bar | 13 | 13 | 13 | 13 | 13 | 13 |
| | Switching pressure | Shuttle valve | | | 10 | 10 | 10 | 10 | 10 | 10 |
| Flow | Flushing flow | at 20 bar on low pressure side and viscosity of approx. 15 cst | | l/min | 6 to 25 (optional) | | | | | |
| | | | | | | | | | | |
| | | | | | | | | | | |
| | | | | | | | | | | |
| | | | | | | | | | | |
| | | | | | | | | | | |
| | | | | | | | | | | |
| | | | | | | | | | | |
| | | | | | | | | | | |
| | | | | | | | | | | |
| | | | | | | | | | | |

# Technical Specification | Functions/Options | Flushing | ISO METR | **CMV 60**


OVERVIEW
- Key Facts

CONFIGURATION
- Modelcode & Availability

TECHNICAL SPECIFICATION
- General Technical Data
- Operating Parameters
- Controls
- Sensors
- Electric Interfaces
  - Connectors
- Mechanical Interfaces
  - Flanges
  - Shafts
- Hydraulical Interfaces
  - Work Ports
  - Auxiliary Ports
- Functions/Options

Flushing
- In combination with ISO 3019-1 / SAE J744 — CMV 60-215
- In combination with ISO 3019-2 metric — CMV 60-215
- In combination with PLUG-IN, SIM. TO ISO 3019-2 — CMV 60-215


In the following you will find the technical specifications of the flushing function. They are clustered according to the related mounting flange and nominal size. First get an overview of the table data showing pressure and flow data of this function. Beyond that you will find the dimensions of the related components in combination with each mounting flange and nominal size. In the section [Model Code & Availability], you can then check the availability of the flushing function in combination with additional functions integrated in the port plate housing. So please have a look at modelcode [item 10. Port Plate housing] and compile your desired configuration.

## Dimensions - Side view

**MAX|NO**

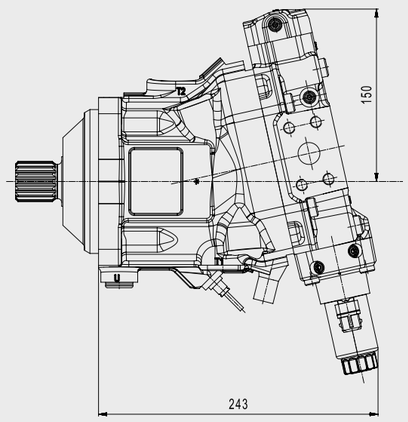


**MAX|FL**

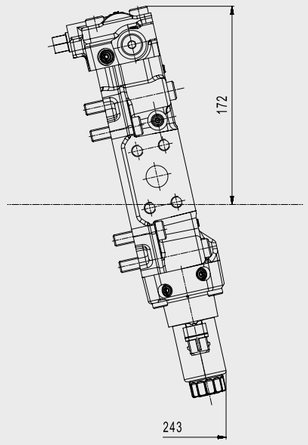


| | | | |
|---|---|---|---|
| MAX\|NO | Examle configuration with control considering default position $Vg_{max}$. Flushing function is not provided. | | |
| MAX\|FL | Examle configuration with control considering default position $Vg_{max}$. Flushing function is provided. | | |

## Dimensions - Side view

**MIN|NO**

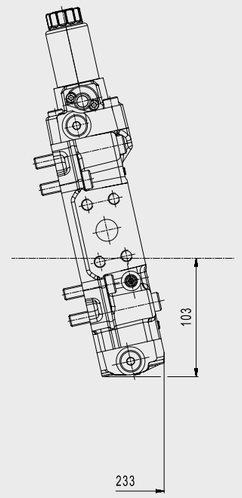


**MIN|FL**

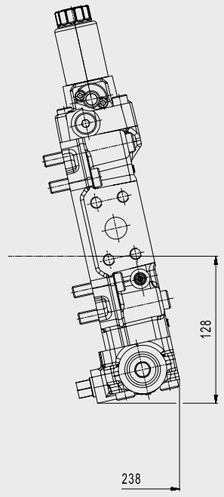


| | | | |
|---|---|---|---|
| MAX\|NO | Examle configuration with control considering default position $Vg_{min}$. Flushing function is not provided. | | |
| MAX\|FL | Examle configuration with control considering default position $Vg_{min}$. Flushing function is provided. | | |

# Technical Specification | Functions/Options | Flushing | ISO METR | **CMV 85**


OVERVIEW
- Key Facts

CONFIGURATION
- Modelcode & Availability

TECHNICAL SPECIFICATION
- General Technical Data
- Operating Parameters
- Controls
- Sensors
- Electric Interfaces
  - Connectors
- Mechanical Interfaces
  - Flanges
  - Shafts
- Hydraulical Interfaces
  - Work Ports
  - Auxiliary Ports
- Functions/Options

Flushing
- In combination with ISO 3019-1 / SAE J744 — CMV 60-215
- In combination with ISO 3019-2 metric — CMV 60-215
- In combination with PLUG-IN, SIM. TO ISO 3019-2 — CMV 60-215


In the following you will find the technical specifications of the flushing function. They are clustered according to the related mounting flange and nominal size. First get an overview of the table data showing pressure and flow data of this function. Beyond that you will find the dimensions of the related components in combination with each mounting flange and nominal size. In the section [Model Code & Availability], you can then check the availability of the flushing function in combination with additional functions integrated in the port plate housing. So please have a look at modelcode [item 10. Port Plate housing] and compile your desired configuration.

## Dimensions - Side view

**MAX|NO**

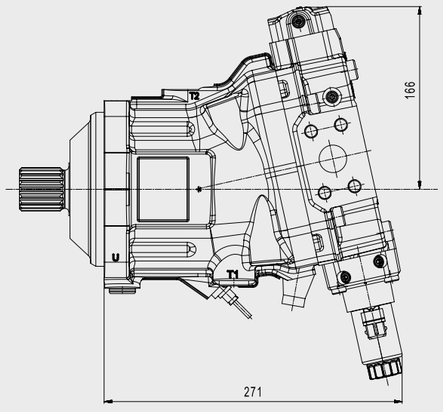


**MAX|FL**

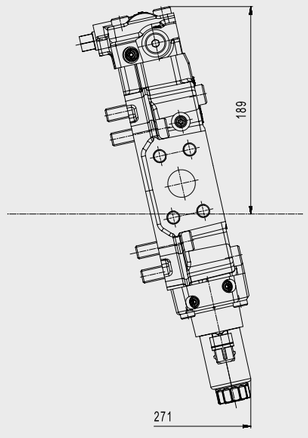


| | | | |
|---|---|---|---|
| MAX\|NO | Examle configuration with control considering default position $Vg_{max}$. Flushing function is not provided. | | |
| MAX\|FL | Examle configuration with control considering default position $Vg_{max}$. Flushing function is provided. | | |

## Dimensions - Side view

**MIN|NO**

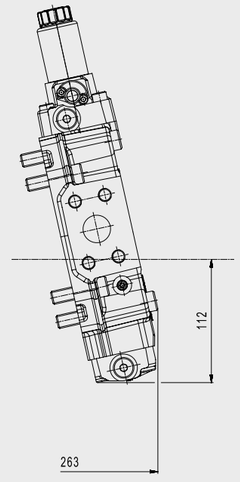


**MIN|FL**

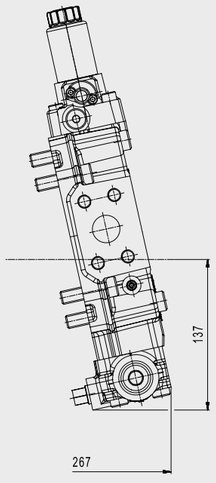


| | | | |
|---|---|---|---|
| MAX\|NO | Examle configuration with control considering default position $Vg_{min}$. Flushing function is not provided. | | |
| MAX\|FL | Examle configuration with control considering default position $Vg_{min}$. Flushing function is provided. | | |

OVERVIEW
Key Facts
CONFIGURATION
Modelcode & Availability
TECHNICAL SPECIFICATION
General Technical Data
Operating Parameters
Controls
Sensors
Electric Interfaces
Connectors
Mechanical Interfaces
Flanges
Shafts
Hydraulical Interfaces
Work Ports
Auxiliary Ports
Functions/Options

Flushing
In combination with ISO 3019-1 / SAE J744
CMV 60-215
In combination with ISO 3019-2 metric
CMV 60-215
In combination with PLUG-IN, SIM. TO ISO 3019-2
CMV 60-215

# Technical Specification | Functions/Options | Flushing | ISO METR | **CMV 115**

In the following you will find the technical specifications of the flushing function. They are clustered according to the related mounting flange and nominal size. First get an overview of the table data showing pressure and flow data of this function. Beyond that you will find the dimensions of the related components in combination with each mounting flange and nominal size. In the section [Model Code & Availability], you can then check the availability of the flushing function in combination with additional functions integrated in the port plate housing. So please have a look at modelcode [item 10. Port Plate housing] and compile your desired configuration.

## Dimensions - Side view

**MAX|NO**

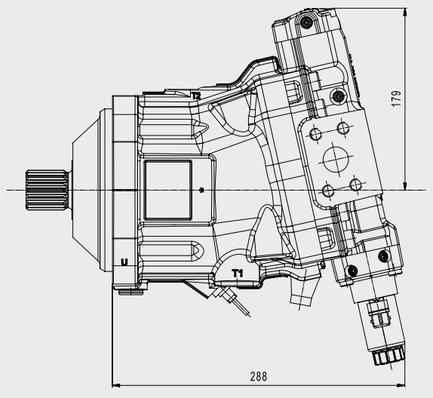


**MAX|FL**

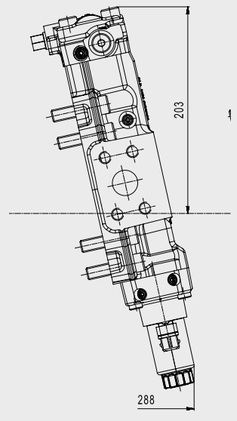


| | | | |
|---|---|---|---|
| MAX\|NO | Examle configuration with control considering default position $Vg_{max}$. Flushing function is not provided. | | |
| MAX\|FL | Examle configuration with control considering default position $Vg_{max}$. Flushing function is provided. | | |

## Dimensions - Side view

**MIN|NO**

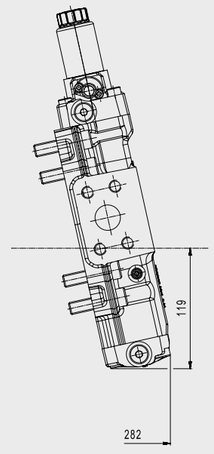


**MIN|FL**

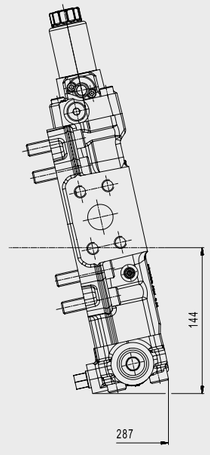


| | | | |
|---|---|---|---|
| MAX\|NO | Examle configuration with control considering default position $Vg_{min}$. Flushing function is not provided. | | |
| MAX\|FL | Examle configuration with control considering default position $Vg_{min}$. Flushing function is provided. | | |

# Technical Specification | Functions/Options | Flushing | ISO METR | **CMV 140**


OVERVIEW
- Key Facts

CONFIGURATION
- Modelcode & Availability

TECHNICAL SPECIFICATION
- General Technical Data
- Operating Parameters
- Controls
- Sensors
- Electric Interfaces
  - Connectors
- Mechanical Interfaces
  - Flanges
  - Shafts
- Hydraulical Interfaces
  - Work Ports
  - Auxiliary Ports
- Functions/Options

Flushing
- In combination with ISO 3019-1 / SAE J744
  - CMV 60-215
- In combination with ISO 3019-2 metric
  - CMV 60-215
- In combination with PLUG-IN, SIM. TO ISO 3019-2
  - CMV 60-215


In the following you will find the technical specifications of the flushing function. They are clustered according to the related mounting flange and nominal size. First get an overview of the table data showing pressure and flow data of this function. Beyond that you will find the dimensions of the related components in combination with each mounting flange and nominal size. In the section [Model Code & Availability], you can then check the availability of the flushing function in combination with additional functions integrated in the port plate housing. So please have a look at modelcode [item 10. Port Plate housing] and compile your desired configuration.

## Dimensions - Side view

**MAX|NO**

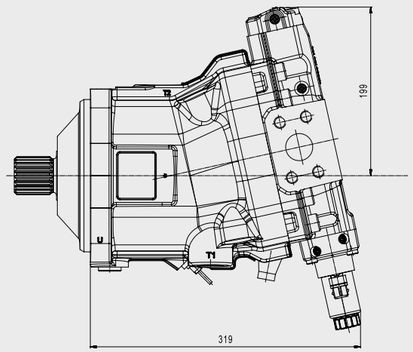


**MAX|FL**

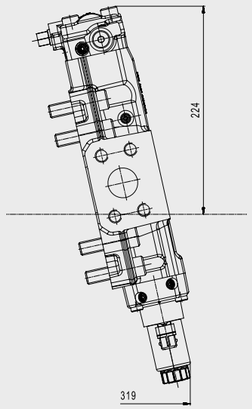


| | | | |
|---|---|---|---|
| MAX\|NO | Examle configuration with control considering default position $Vg_{max}$. Flushing function is not provided. | | |
| MAX\|FL | Examle configuration with control considering default position $Vg_{max}$. Flushing function is provided. | | |

## Dimensions - Side view

**MIN|NO**

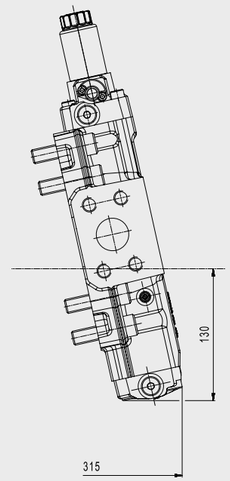


**MIN|FL**

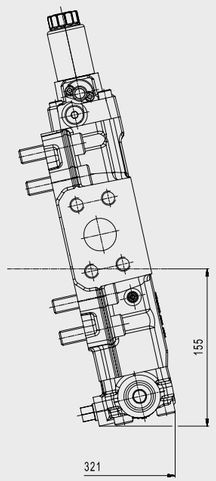


| | | | |
|---|---|---|---|
| MAX\|NO | Examle configuration with control considering default position $Vg_{min}$. Flushing function is not provided. | | |
| MAX\|FL | Examle configuration with control considering default position $Vg_{min}$. Flushing function is provided. | | |

# Technical Specification | Functions/Options | Flushing | ISO METR | **CMV 170**


OVERVIEW
- Key Facts

CONFIGURATION
- Modelcode & Availability

TECHNICAL SPECIFICATION
- General Technical Data
- Operating Parameters
- Controls
- Sensors
- Electric Interfaces
  - Connectors
- Mechanical Interfaces
  - Flanges
  - Shafts
- Hydraulical Interfaces
  - Work Ports
  - Auxiliary Ports
- Functions/Options

Flushing
- In combination with ISO 3019-1 / SAE J744 — CMV 60-215
- In combination with ISO 3019-2 metric — CMV 60-215
- In combination with PLUG-IN, SIM. TO ISO 3019-2 — CMV 60-215


In the following you will find the technical specifications of the flushing function. They are clustered according to the related mounting flange and nominal size. First get an overview of the table data showing pressure and flow data of this function. Beyond that you will find the dimensions of the related components in combination with each mounting flange and nominal size. In the section [Model Code & Availability], you can then check the availability of the flushing function in combination with additional functions integrated in the port plate housing. So please have a look at modelcode [item 10. Port Plate housing] and compile your desired configuration.

## Dimensions - Side view

MAX|NO

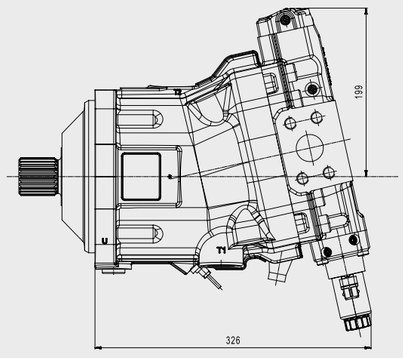


MAX|FL

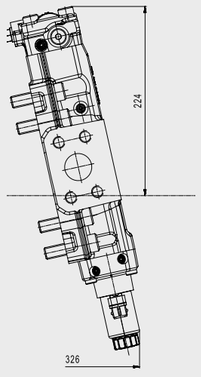


| | | | |
|---|---|---|---|
| MAX\|NO | Examle configuration with control considering default position $Vg_{max}$. Flushing function is not provided. | | |
| MAX\|FL | Examle configuration with control considering default position $Vg_{max}$. Flushing function is provided. | | |

## Dimensions - Side view

MIN|NO

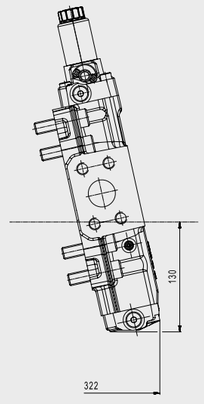


MIN|FL

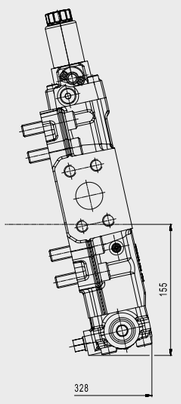


| | | | |
|---|---|---|---|
| MAX\|NO | Examle configuration with control considering default position $Vg_{min}$. Flushing function is not provided. | | |
| MAX\|FL | Examle configuration with control considering default position $Vg_{min}$. Flushing function is provided. | | |

# Technical Specification | Functions/Options | Flushing | ISO METR | **CMV 215**


OVERVIEW
- Key Facts

CONFIGURATION
- Modelcode & Availability

TECHNICAL SPECIFICATION
- General Technical Data
- Operating Parameters
- Controls
- Sensors
- Electric Interfaces
  - Connectors
- Mechanical Interfaces
  - Flanges
  - Shafts
- Hydraulical Interfaces
  - Work Ports
  - Auxiliary Ports
- Functions/Options

Flushing
- In combination with ISO 3019-1 / SAE J744
  - CMV 60-215
- In combination with ISO 3019-2 metric
  - CMV 60-215
- In combination with PLUG-IN, SIM. TO ISO 3019-2
  - CMV 60-215


In the following you will find the technical specifications of the flushing function. They are clustered according to the related mounting flange and nominal size. First get an overview of the table data showing pressure and flow data of this function. Beyond that you will find the dimensions of the related components in combination with each mounting flange and nominal size. In the section [Model Code & Availability], you can then check the availability of the flushing function in combination with additional functions integrated in the port plate housing. So please have a look at modelcode [item 10. Port Plate housing] and compile your desired configuration.

## Dimensions - Side view

**MAX|NO**

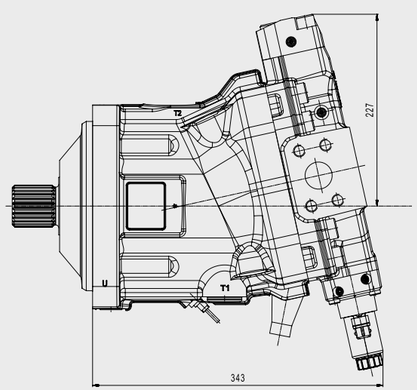


**MAX|FL**

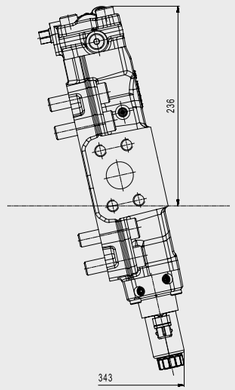


| | | | |
|---|---|---|---|
| MAX\|NO | Examle configuration with control considering default position $Vg_{max}$. Flushing function is not provided. | | |
| MAX\|FL | Examle configuration with control considering default position $Vg_{max}$. Flushing function is provided. | | |

## Dimensions - Side view

**MIN|NO**

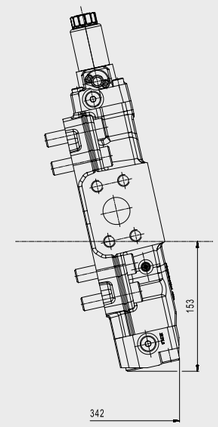


**MIN|FL**

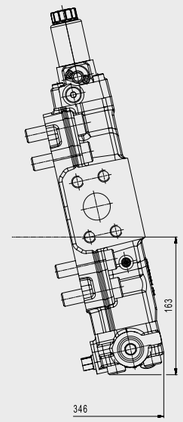


| | | | |
|---|---|---|---|
| MAX\|NO | Examle configuration with control considering default position $Vg_{min}$. Flushing function is not provided. | | |
| MAX\|FL | Examle configuration with control considering default position $Vg_{min}$. Flushing function is provided. | | |

# Technical Specification | Functions/Options | Flushing | ISO METR | **CMV 60-215**


OVERVIEW
- Key Facts

CONFIGURATION
- Modelcode & Availability

TECHNICAL SPECIFICATION
- General Technical Data
- Operating Parameters
- Controls
- Sensors
- Electric Interfaces
  - Connectors
- Mechanical Interfaces
  - Flanges
  - Shafts
- Hydraulical Interfaces
  - Work Ports
  - Auxiliary Ports
- Functions/Options

Flushing
- In combination with ISO 3019-1 / SAE J744
  - CMV 60-215
- In combination with ISO 3019-2 metric
  - CMV 60-215
- In combination with PLUG-IN, SIM. TO ISO 3019-2
  - CMV 60-215


In the following you will find the technical specifications of the flushing function. They are clustered according to the related mounting flange and nominal size. First get an overview of the table data showing pressure and flow data of this function. Beyond that you will find the dimensions of the related components in combination with each mounting flange and nominal size. In the section [Model Code & Availability], you can then check the availability of the flushing function in combination with additional functions integrated in the port plate housing. So please have a look at modelcode [item 10. Port Plate housing] and compile your desired configuration.

## Hydraulic Diagram (Configuration Examples)

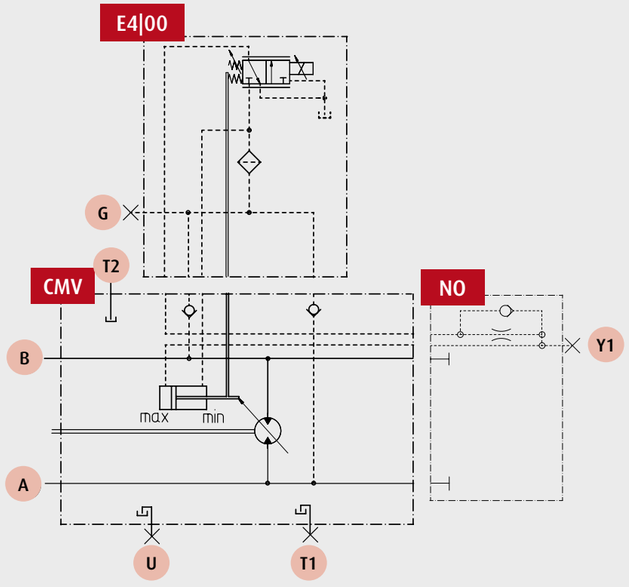


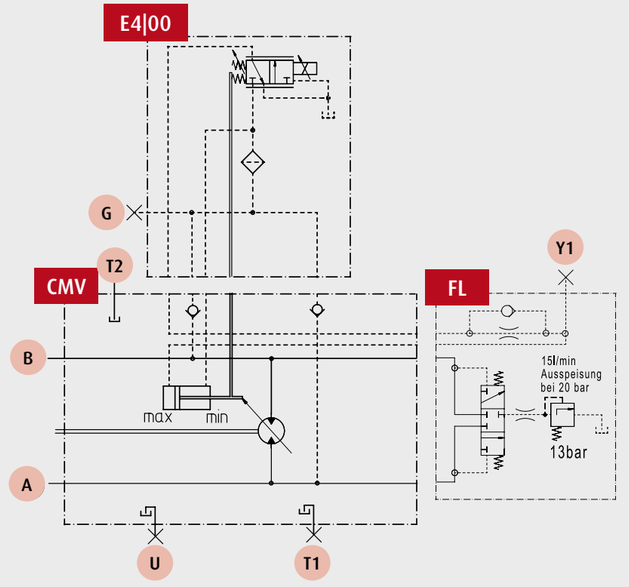


| | | | |
|---|---|---|---|
| CMV | Basic motor (without Controls/Functions/Options) | FL | Cover that provides flushing function |
| E4\|00 | Displ. Contrl. E4 + Press. Contrl. 00 | | |
| NO | Blind cover that closes the interface of the portplate and does not provide flushing function | A | High pressure work port |
| | | B | High pressure work port |

| | | | |
|---|---|---|---|
| AX | Pressure equalization port | G | Ext. control pressure supply |
| BX | | U | Bearing flush port |
| T1 | Drain / vent port | Y1 | Measuring port |
| T2 | | | |

# Technical Specification | Functions/Options | Flushing | Plug-In | **CMV 60-215**


OVERVIEW
- Key Facts

CONFIGURATION
- Modelcode & Availability

TECHNICAL SPECIFICATION
- General Technical Data
- Operating Parameters
- Controls
- Sensors
- Electric Interfaces
  - Connectors
- Mechanical Interfaces
  - Flanges
  - Shafts
- Hydraulical Interfaces
  - Work Ports
  - Auxiliary Ports
- Functions/Options

Flushing
- In combination with ISO 3019-1 / SAE J744
  - CMV 60-215
- In combination with ISO 3019-2 metric
  - CMV 60-215
- In combination with PLUG-IN, SIM. TO ISO 3019-2
  - CMV 60-215


In the following you will find the technical specifications of the flushing function. They are clustered according to the related mounting flange and nominal size. First get an overview of the table data showing pressure and flow data of this function. Beyond that you will find the dimensions of the related components in combination with each mounting flange and nominal size. In the section [Model Code & Availability], you can then check the availability of the flushing function in combination with additional functions integrated in the port plate housing. So please have a look at modelcode [item 10. Port Plate housing] and compile your desired configuration.

The flushing function is used in closed circuit applications. Its primary function is to remove heat from the hydraulic circuit by flushing the housing. It also ensures the minimum charge pressure. In order to achieve this, the pressure fluid is discharged from the respective low-pressure side into the motor housing. Along with the leakage, this is discharged into the tank. The extracted pressure fluid is replaced with cooled pressure fluid by charge pump. The flushing function is mounted on the port plate housing.

| Specification | | | | | |
|---|---|---|---|---|---|
| Nominal size | | | | | |
| Pressure | Opening pressure | Flushing relief valve | | | bar |
| | Switching pressure | Shuttle valve | | | |
| Flow | Flushing flow | at 20 bar on low pressure side and viscosity of approx. 15 cst | | | l/min |
| | | | | | |
| | | | | | |
| | | | | | |
| | | | | | |
| | | | | | |
| | | | | | |
| | | | | | |
| | | | | | |
| | | | | | |

| | | | | | |
|---|---|---|---|---|---|
| 60 | 85 | 115 | 140 | 170 | 215 |
| 13 | 13 | 13 | 13 | 13 | 13 |
| 10 | 10 | 10 | 10 | 10 | 10 |
| 6 to 25 (optional) | | | | | |
| | | | | | |
| | | | | | |
| | | | | | |
| | | | | | |
| | | | | | |
| | | | | | |
| | | | | | |
| | | | | | |
| | | | | | |

OVERVIEW
Key Facts
CONFIGURATION
Modelcode & Availability
TECHNICAL SPECIFICATION
General Technical Data
Operating Parameters
Controls
Sensors
Electric Interfaces
Connectors
Mechanical Interfaces
Flanges
Shafts
Hydraulical Interfaces
Work Ports
Auxiliary Ports
Functions/Options

Flushing
In combination with ISO 3019-1 / SAE J744
CMV 60-215
In combination with ISO 3019-2 metric
CMV 60-215
In combination with PLUG-IN, SIM. TO ISO 3019-2
CMV 60-215

# Technical Specification | Functions/Options | Flushing | Plug-In | **CMV 60**

In the following you will find the technical specifications of the flushing function. They are clustered according to the related mounting flange and nominal size. First get an overview of the table data showing pressure and flow data of this function. Beyond that you will find the dimensions of the related components in combination with each mounting flange and nominal size. In the section [Model Code & Availability], you can then check the availability of the flushing function in combination with additional functions integrated in the port plate housing. So please have a look at modelcode [item 10. Port Plate housing] and compile your desired configuration.

## Dimensions - Side view

MAX|NO

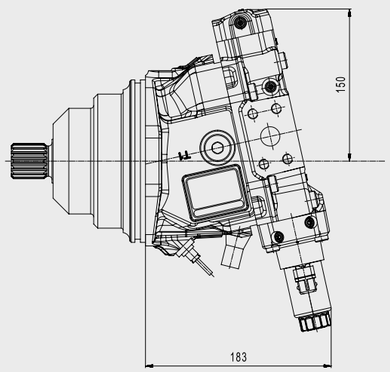


MAX|FL

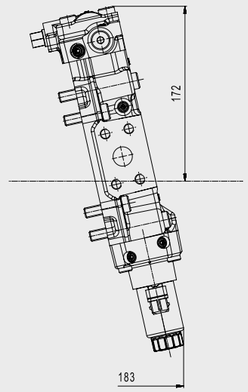


| | | | |
|---|---|---|---|
| MAX\|NO | Examle configuration with control considering default position $Vg_{max.}$ Flushing function is not provided. | | |
| MAX\|FL | Examle configuration with control considering default position $Vg_{max.}$ Flushing function is provided. | | |

## Dimensions - Side view

MIN|NO

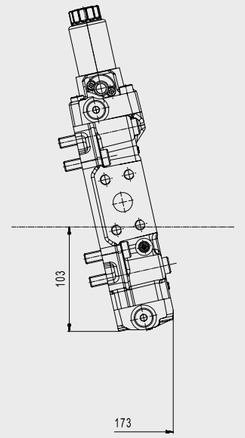


MIN|FL

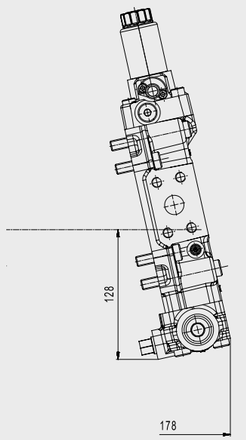


| | | | |
|---|---|---|---|
| MAX\|NO | Examle configuration with control considering default position $Vg_{min.}$ Flushing function is not provided. | | |
| MAX\|FL | Examle configuration with control considering default position $Vg_{min.}$ Flushing function is provided. | | |

# Technical Specification | Functions/Options | Flushing | Plug-In | **CMV 85**


OVERVIEW
- Key Facts

CONFIGURATION
- Modelcode & Availability

TECHNICAL SPECIFICATION
- General Technical Data
- Operating Parameters
- Controls
- Sensors
- Electric Interfaces
  - Connectors
- Mechanical Interfaces
  - Flanges
  - Shafts
- Hydraulical Interfaces
  - Work Ports
  - Auxiliary Ports
- Functions/Options

Flushing
- In combination with ISO 3019-1 / SAE J744 — CMV 60-215
- In combination with ISO 3019-2 metric — CMV 60-215
- In combination with PLUG-IN, SIM. TO ISO 3019-2 — CMV 60-215


In the following you will find the technical specifications of the flushing function. They are clustered according to the related mounting flange and nominal size. First get an overview of the table data showing pressure and flow data of this function. Beyond that you will find the dimensions of the related components in combination with each mounting flange and nominal size. In the section [Model Code & Availability], you can then check the availability of the flushing function in combination with additional functions integrated in the port plate housing. So please have a look at modelcode [item 10. Port Plate housing] and compile your desired configuration.

## Dimensions - Side view

MAX|NO

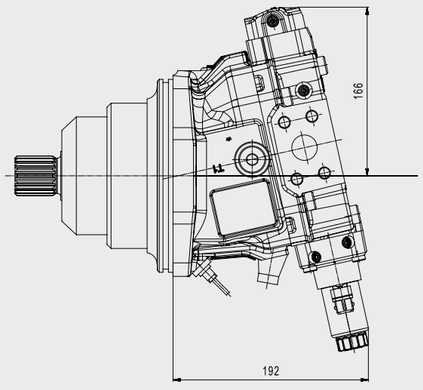


MAX|FL

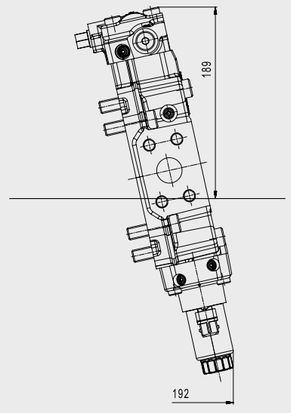


| | | | |
|---|---|---|---|
| MAX\|NO | Examle configuration with control considering default position $Vg_{max}$. Flushing function is not provided. | | |
| MAX\|FL | Examle configuration with control considering default position $Vg_{max}$. Flushing function is provided. | | |

## Dimensions - Side view

MIN|NO

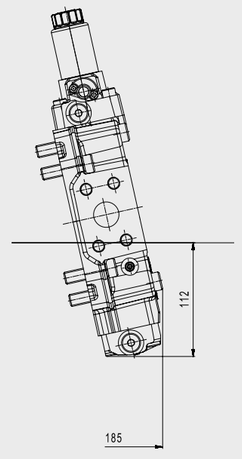


MIN|FL

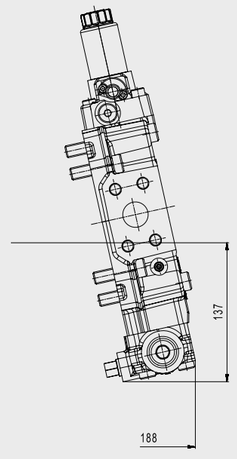


| | | | |
|---|---|---|---|
| MAX\|NO | Examle configuration with control considering default position $Vg_{min}$. Flushing function is not provided. | | |
| MAX\|FL | Examle configuration with control considering default position $Vg_{min}$. Flushing function is provided. | | |

OVERVIEW
Key Facts
CONFIGURATION
Modelcode & Availability
TECHNICAL SPECIFICATION
General Technical Data
Operating Parameters
Controls
Sensors
Electric Interfaces
Connectors
Mechanical Interfaces
Flanges
Shafts
Hydraulical Interfaces
Work Ports
Auxiliary Ports
Functions/Options

Flushing
In combination with ISO 3019-1 / SAE J744
CMV 60-215
In combination with ISO 3019-2 metric
CMV 60-215
In combination with PLUG-IN, SIM. TO ISO 3019-2
CMV 60-215

# Technical Specification | Functions/Options | Flushing | Plug-In | **CMV 115**

In the following you will find the technical specifications of the flushing function. They are clustered according to the related mounting flange and nominal size. First get an overview of the table data showing pressure and flow data of this function. Beyond that you will find the dimensions of the related components in combination with each mounting flange and nominal size. In the section [Model Code & Availability], you can then check the availability of the flushing function in combination with additional functions integrated in the port plate housing. So please have a look at modelcode [item 10. Port Plate housing] and compile your desired configuration.

## Dimensions - Side view

**MAX|NO**

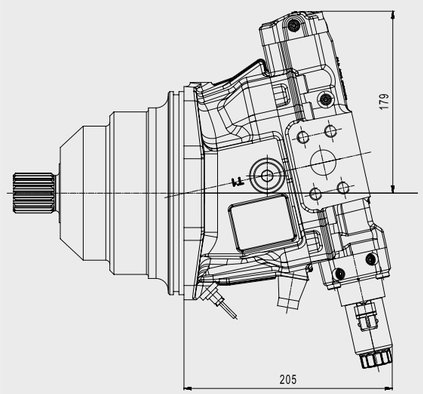


**MAX|FL**

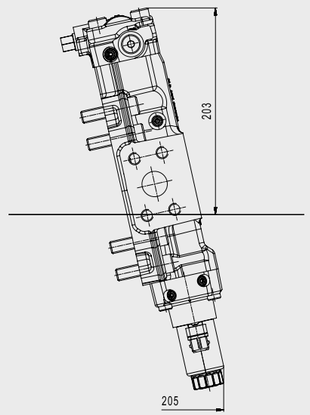


| | | | |
|---|---|---|---|
| MAX\|NO | Examle configuration with control considering default position $Vg_{max}$. Flushing function is not provided. | | |
| MAX\|FL | Examle configuration with control considering default position $Vg_{max}$. Flushing function is provided. | | |

## Dimensions - Side view

**MIN|NO**

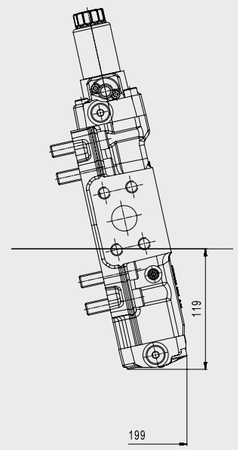


**MIN|FL**

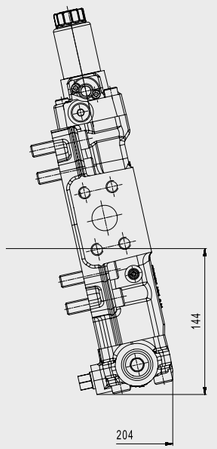


| | | | |
|---|---|---|---|
| MAX\|NO | Examle configuration with control considering default position $Vg_{min}$. Flushing function is not provided. | | |
| MAX\|FL | Examle configuration with control considering default position $Vg_{min}$. Flushing function is provided. | | |

OVERVIEW
Key Facts
CONFIGURATION
Modelcode & Availability
TECHNICAL SPECIFICATION
General Technical Data
Operating Parameters
Controls
Sensors
Electric Interfaces
Connectors
Mechanical Interfaces
Flanges
Shafts
Hydraulical Interfaces
Work Ports
Auxiliary Ports
Functions/Options

Flushing
In combination with ISO 3019-1 / SAE J744
CMV 60-215
In combination with ISO 3019-2 metric
CMV 60-215
In combination with PLUG-IN, SIM. TO ISO 3019-2
CMV 60-215

# Technical Specification | Functions/Options | Flushing | Plug-In | **CMV 140**

In the following you will find the technical specifications of the flushing function. They are clustered according to the related mounting flange and nominal size. First get an overview of the table data showing pressure and flow data of this function. Beyond that you will find the dimensions of the related components in combination with each mounting flange and nominal size. In the section [Model Code & Availability], you can then check the availability of the flushing function in combination with additional functions integrated in the port plate housing. So please have a look at modelcode [item 10. Port Plate housing] and compile your desired configuration.

## Dimensions - Side view

**MAX|NO**

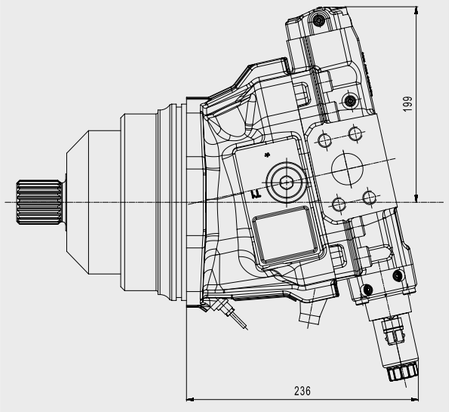


**MAX|FL**

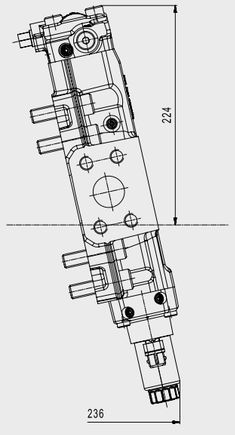


| | | | |
|---|---|---|---|
| MAX\|NO | Examle configuration with control considering default position $Vg_{max}$. Flushing function is not provided. | | |
| MAX\|FL | Examle configuration with control considering default position $Vg_{max}$. Flushing function is provided. | | |

## Dimensions - Side view

**MIN|NO**

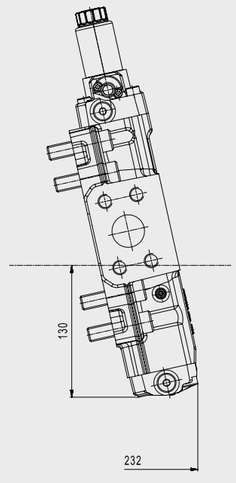


**MIN|FL**

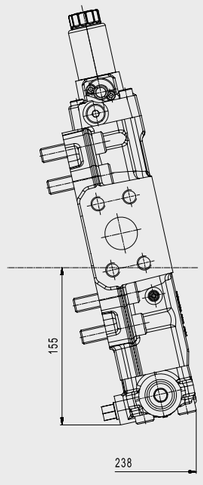


| | | | |
|---|---|---|---|
| MAX\|NO | Examle configuration with control considering default position $Vg_{min}$. Flushing function is not provided. | | |
| MAX\|FL | Examle configuration with control considering default position $Vg_{min}$. Flushing function is provided. | | |

# Technical Specification | Functions/Options | Flushing | Plug-In | **CMV 170**


OVERVIEW
- Key Facts

CONFIGURATION
- Modelcode & Availability

TECHNICAL SPECIFICATION
- General Technical Data
- Operating Parameters
- Controls
- Sensors
- Electric Interfaces
  - Connectors
- Mechanical Interfaces
  - Flanges
  - Shafts
- Hydraulical Interfaces
  - Work Ports
  - Auxiliary Ports
- Functions/Options

Flushing
- In combination with ISO 3019-1 / SAE J744
  - CMV 60-215
- In combination with ISO 3019-2 metric
  - CMV 60-215
- In combination with PLUG-IN, SIM. TO ISO 3019-2
  - CMV 60-215


In the following you will find the technical specifications of the flushing function. They are clustered according to the related mounting flange and nominal size. First get an overview of the table data showing pressure and flow data of this function. Beyond that you will find the dimensions of the related components in combination with each mounting flange and nominal size. In the section [Model Code & Availability], you can then check the availability of the flushing function in combination with additional functions integrated in the port plate housing. So please have a look at modelcode [item 10. Port Plate housing] and compile your desired configuration.

## Dimensions - Side view

**MAX|NO**

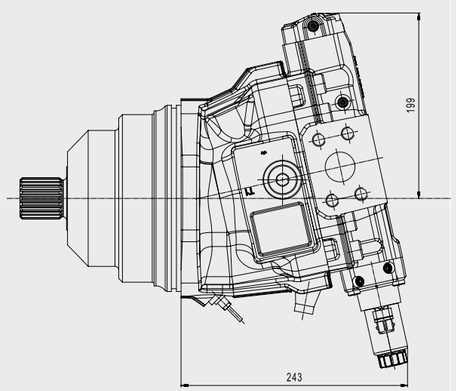


**MAX|FL**

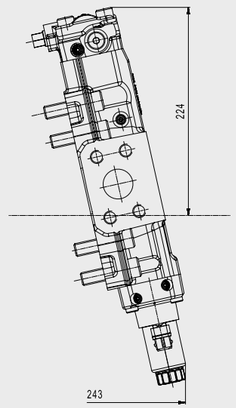


| | | | |
|---|---|---|---|
| MAX\|NO | Examle configuration with control considering default position $Vg_{max}$. Flushing function is not provided. | | |
| MAX\|FL | Examle configuration with control considering default position $Vg_{max}$. Flushing function is provided. | | |

## Dimensions - Side view

**MIN|NO**

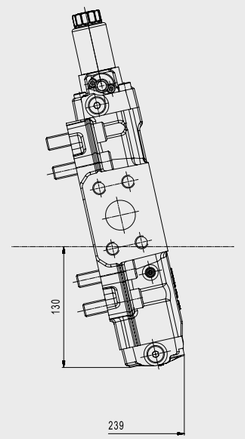


**MIN|FL**

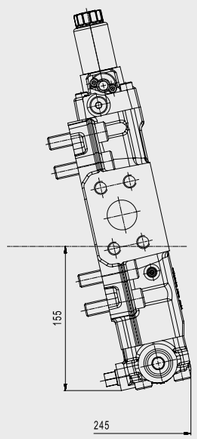


| | | | |
|---|---|---|---|
| MAX\|NO | Examle configuration with control considering default position $Vg_{min}$. Flushing function is not provided. | | |
| MAX\|FL | Examle configuration with control considering default position $Vg_{min}$. Flushing function is provided. | | |

OVERVIEW
Key Facts
CONFIGURATION
Modelcode & Availability
TECHNICAL SPECIFICATION
General Technical Data
Operating Parameters
Controls
Sensors
Electric Interfaces
Connectors
Mechanical Interfaces
Flanges
Shafts
Hydraulical Interfaces
Work Ports
Auxiliary Ports
Functions/Options

Flushing
In combination with ISO 3019-1 / SAE J744
CMV 60-215
In combination with ISO 3019-2 metric
CMV 60-215
In combination with PLUG-IN, SIM. TO ISO 3019-2
CMV 60-215

# Technical Specification | Functions/Options | Flushing | Plug-In | **CMV 215**

In the following you will find the technical specifications of the flushing function. They are clustered according to the related mounting flange and nominal size. First get an overview of the table data showing pressure and flow data of this function. Beyond that you will find the dimensions of the related components in combination with each mounting flange and nominal size. In the section [Model Code & Availability], you can then check the availability of the flushing function in combination with additional functions integrated in the port plate housing. So please have a look at modelcode [item 10. Port Plate housing] and compile your desired configuration.

## Dimensions - Side view

MAX|NO

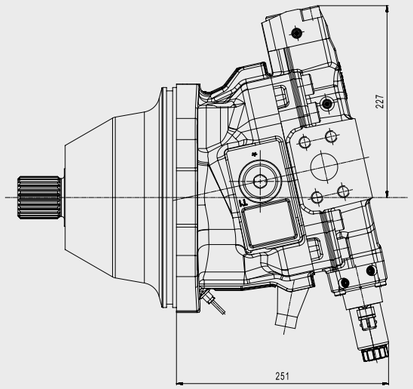


MAX|FL

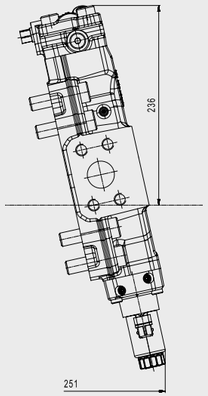


| | | | |
|---|---|---|---|
| MAX\|NO | Examle configuration with control considering default position $Vg_{max}$. Flushing function is not provided. | | |
| MAX\|FL | Examle configuration with control considering default position $Vg_{max}$. Flushing function is provided. | | |

## Dimensions - Side view

MIN|NO

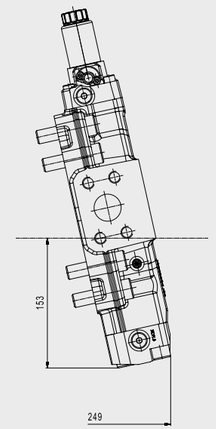


MIN|FL

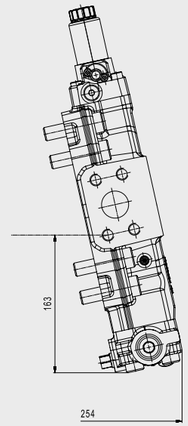


| | | | |
|---|---|---|---|
| MAX\|NO | Examle configuration with control considering default position $Vg_{min}$. Flushing function is not provided. | | |
| MAX\|FL | Examle configuration with control considering default position $Vg_{min}$. Flushing function is provided. | | |

# Technical Specification | Functions/Options | Flushing | Plug-In | **CMV 60-215**


OVERVIEW
- Key Facts

CONFIGURATION
- Modelcode & Availability

TECHNICAL SPECIFICATION
- General Technical Data
- Operating Parameters
- Controls
- Sensors
- Electric Interfaces
  - Connectors
- Mechanical Interfaces
  - Flanges
  - Shafts
- Hydraulical Interfaces
  - Work Ports
  - Auxiliary Ports
- Functions/Options

Flushing
- In combination with ISO 3019-1 / SAE J744 — CMV 60-215
- In combination with ISO 3019-2 metric — CMV 60-215
- In combination with PLUG-IN, SIM. TO ISO 3019-2 — CMV 60-215


In the following you will find the technical specifications of the flushing function. They are clustered according to the related mounting flange and nominal size. First get an overview of the table data showing pressure and flow data of this function. Beyond that you will find the dimensions of the related components in combination with each mounting flange and nominal size. In the section [Model Code & Availability], you can then check the availability of the flushing function in combination with additional functions integrated in the port plate housing. So please have a look at modelcode [item 10. Port Plate housing] and compile your desired configuration.

## Hydraulic Diagram (Configuration Examples)

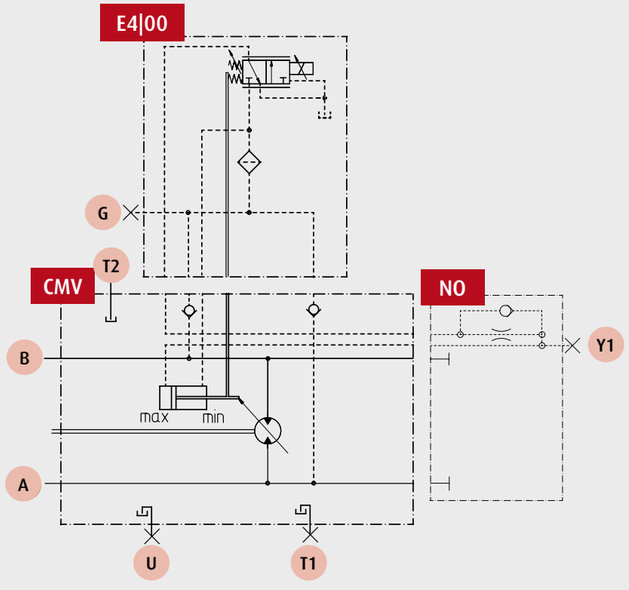


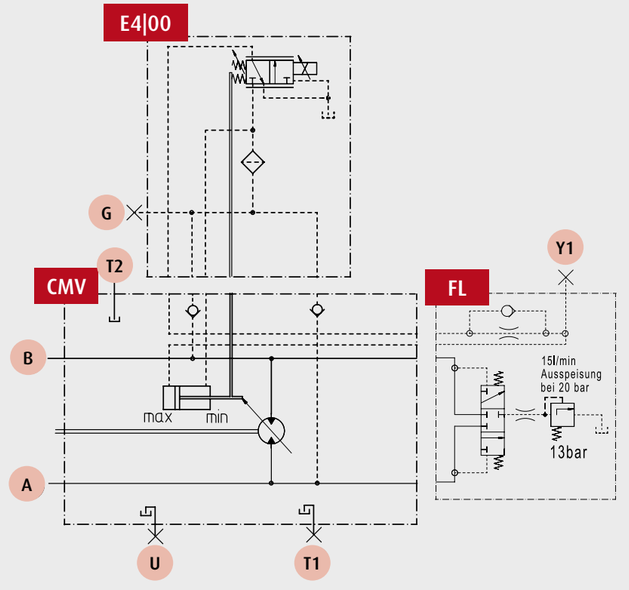


| | | | |
|---|---|---|---|
| CMV | Basic motor (without Controls/Functions/Options) | FL | Cover that provides flushing function |
| E4\|00 | Displ. Contrl. E4 + Press. Contrl. 00 | | |
| NO | Blind cover that closes the interface of the portplate and does not provide flushing function | A | High pressure work port |
| | | B | High pressure work port |

| | | | |
|---|---|---|---|
| AX | Pressure equalization port | G | Ext. control pressure supply |
| BX | | U | Bearing flush port |
| T1 | Drain / vent port | Y1 | Measuring port |
| T2 | | | |

**Linde Hydraulics GmbH & Co. KG**
Wailandtstrasse 13, 63741 Aschaffenburg, Germany
Phone +49.60 21.150-00, Fax +49.60 21.150-115 70
info@linde-hydraulics.com
www.linde-hydraulics.com

Turning Power into Motion.

Linde Hydraulics